CORINTH PIPEWORKS
PIPE INDUSTRY S.A.

- **QUALITY CONTROL METHODS;**

Please refer to the herein presented Manufacturing procedure specifications. You may also refer to the previously included project quality plan.

Within such material we demonstrate the approach for execution of the activities, the specific tasks and steps in their sequence, coordination and mutual interdependence. It is justified how the proposed approach for quality control will lead to the qualitative and timely completion of our delivery.

CORINTH PIPEWORKS S.A.

HEAD OFFICES: [illegible] Athens Greece
CORPORATE HEADQUARTERS: [illegible] Athens Greece
[illegible]
General Commercial Registry No [illegible]
VAT Number EL 099363335
Tax Office FAE Athens

CORINTH PIPEWORKS
PIPE INDUSTRY S.A.

MANUFACTURING PROCEDURE SPECIFICATIONS (SAWH, SAWL, PE COATING AND LINING)

HEAD OFFICES: 2-4 Mesogeion Av., 115 27 Athens, Greece
CORPORATE HEADQUARTERS: 33, Amarousiou-Halandriou Str., GR-15125, Marousi, Athens, Greece
Tel: +30 210 6787 111, fax: +30 210 6787 520 / email: info@cpw.gr

General Commercial Registry No: 003978301000
VAT Number: EL 099362325
Tax Office: FAE Athens

CORINTH PIPEWORKS	QUALITY DEPARTMENT	PAGE 1/34
	THISVI PLANT	

TITLE	MANUFACTURING PROCEDURE SPECIFICATION
DOCUMENT No.	MPS_03_18_SAWL
REVISION No.	0
PRODUCTION LINE	SAWL
CUSTOMER / PROJECT	ICGB INTERCONNECTOR INTERCONNECTOR GREECE - BULGARIA
SIZE / GRADE / QUANTITY	

Pos. No	OD (in)	WT (mm)	Grade PSL2	Type	Lengths	Purpose	Quantity (m)
2	32	11	L450ME	SAWL	12m	Cold bend	13.345
4	32	14,2	L450ME	SAWL	12m	Cold bend	8.935
6	32	16	L450ME	SAWL	12m	Cold bend	3.593
7	32	20	L450ME	SAWL	12m	Line	5.271
8	32	20	L450ME	SAWL	12m	Cold bend	1.017
12	32	20	L450ME	SAWL	12m	Emergency stock	24

PRELIMINARY

	ISSUED	REVIEWED / APPROVED	CUSTOMER APPROVED
DATE	11/01/2018	12/01/2018	
NAME / SIGNATURE	P. FOTOPOULOS QC MGR	N. VOUDOURIS QUALITY DIRECTOR	CORINTH PIPEWORKS S.A.

Contents

A. INTRODUCTION 4
B. TERMS AND ABBREVIATIONS 5
C. DESCRIPTION OF EQUIPMENT 9
D. PROCESS FLOW-CHART 13
1. Steel Manufacturing 14
2. Plate Reception 15
3. Tab Welding 16
4. Plate / Pipe Identification 17
5. Plate Inspection for Laminar Imperfections 17
6. Plate Edge Milling 18
7. Crimping 18
8. JCO Press 19
9. Finishing Press 19
10. Tack Welding 19
11. Pipe Welding (Inside & Outside SAW) 20
12. Initial Visual Inspection 21
13. Weld bead removal at pipe ends 21
14. Mill Control WSUT Station Prior to Expander 21
15. Digital Radiographic Inspection at the Weld Seam Area 23
16. Cold Expansion (Single-Head Mechanical Expander) 23
17. Hydrostatic Testing 24
18. Sampling / Laboratory Testing 25
19. Qualification of Personnel 25
20. Final Automatic Weld Seam Ultrasonic (WSUT) 25
21. Manual Ultrasonic Inspection 27

CORINTH PIPEWORKS S.A.

22. Radiographic Inspection of Weld Seam at Pipe Ends and Weld Repairs 27
23. End Bevelling 28
24. Visual Inspection 28
25. Pipe Straightness 28
26. End Squareness 29
27. Weld Misalignment 29
28. Radial Offset 30
29. Weld Bead Height 30
30. Wall Thickness 31
31. Diameter 31
32. Out-Of-Roundness 32
33. Weld Peaking at Pipe Ends 32
34. Residual Magnetism 33
35. Treatment of Surface Defects by Grinding 33
36. Treatment of Surface Defects by Repair Welding 33
37. Tallying / Marking 34

CORINTH PIPEWORKS

A. INTRODUCTION

The present Manufacturing Procedure Specification (MPS) describes the basic manufacturing steps as well as quality control activities, which are involved with the production and inspection of *Submerged Arc Welded Longitudinal (SAWL)* seam steel pipes at the Corinth Pipeworks SAWL mill, located at Thisvi, Greece. This document has been issued according to the requirements of the following specifications (latest editions):

The applied specifications/standards/procedures are:

Applicable Standards, Specifications & Procedures
Code or Number / Title
ISO 3183:2012 (Including Annex M) / Petroleum and natural gas industries — Steel pipe for pipeline transportation systems Licensed
Technical Specification for Supply of Line Pipes DN800, Project IGB
ITP_05_18_SAWL / Inspection and Test Plan (ITP)

CORINTH PIPEWORKS S.A.

B. TERMS AND ABBREVIATIONS

TERM	DEFINITION
Calibration	The procedure of comparison and adjustment to a standard (master) of known accuracy.
Coating	External coating or internal lining
Conformance	Compliance with specified requirements.
Documentation	Recorded information.
Heat	Steel material originating from one final melt.
Inspection and Test Plan (ITP)	A document coning information about the quality schedule of a specific customer, order or project, such as type and frequency of tests, acceptance criteria, hold-points, etc.
Manufacturing Procedure Specification (MPS)	A document containing information about the manufacturing steps that will be followed for the execution of the production for a specific customer, order or project.
Non- conformance	Any deviation form specified requirements.
Pipe Number	A unique identification number for pipe(s) produced under the same sub number of Process sheet number. It includes Production Serial Number and Pipe Serial Number.
Plate Number	The sequential number assigned by Corinth Pipeworks to each plate from the same thickness and grade of material.
Procedure	Organization's documented method for performing an activity under controlled conditions.
Process Sheet (PS)	Master document for controlling operations, special processes, examinations, tests, hold-points, inspections and acceptance criteria.
Production Serial Number	The sequential serial number assigned to each product (pipe) manufactured from the same thickness and grade of material.
Qualified Personnel	Individuals with characteristics or abilities gained through education, training, experience or examination.

CORINTH PIPEWORKS

TERM	DEFINITION
Quality Control	Any inspection, test, or examination performed to ensure that materials products or services conform to specified requirements.
Repair	The process of restoring a non-conformance, (e.g. grinding, welding for welded pipe).
Standard	A prescribed set of conditions and requirements in the form of published document.
Verification	The process of determining through marking and records conformance to specified requirements.
Visual Examination	Examination of parts and equipment for visible defects in material and workmanship.

ABBREVIATION	EXPLANATION
API	American Petroleum Institute
AWPUT	Automatic Weld Seam Ultrasonic Testing
ASNT	American Society for Nondestructive Testing
ASME	American Society of Mechanical Engineers
ASTM	American Society of Testing and Material
AWSUT	Automatic Weld Seam Ultrasonic Testing
BSR	Basic Spatial Resolution
CPW	Corinth Pipeworks S.A.
CR	Computed Radiography

CORINTH PIPEWORKS S.A.

ABBREVIATION	EXPLANATION
DAC	Distance / Amplitude Correction
DGT	Digital Gathering Terminal
DWTT	Drop Weight Tear Testing
EN	European Norm
FBH	Flat Bottom Hole
FBUT	Full Body Ultrasonic Testing
GMAW	Gas Metal Arc Welding
HAZ	Heat Affected Zone
HSLA	High Strength Low Alloyed
ID	Inside Diameter
IIW	International Institute of Welding
IQI	Image Quality Indicator
ISO	International Organization for Standardization
ITP	Inspection and Test Plan
LEMS	Laser End Measuring System
MPS	Manufacturing Procedure Specification
MTC	Mill Test Certificate

CORINTH PIPEWORKS S.A.

ABBREVIATION	EXPLANATION
NCR	Non-Conformance Report
NDE	Non Destructive Examination
NDT	Non Destructive Testing
OD	Outside Diameter
PA	Phased Array
PRF	Pulse Repetition Frequency
QC	Quality Control
RDH	Radial Drilled Hole
SAW	Submerged Arc Welding
SAWL	Submerged Arc Welding Longitudinal
SDH	Side Drilled Hole
SMAW	Shielded Metal Arc Welding
SMYS	Specified Minimum Yield Strength
SWSI	Single Wall – Single Image
WPQR	Welding Procedure Qualification Record
WPS	Welding Procedure Specification
WSUT	Weld Seam Ultrasonic Testing

CORINTH PIPEWORKS S.A.

C. DESCRIPTION OF EQUIPMENT

The equipment for the production of longitudinal submerged-arc (LSAW) welded pipes from steel plates, has been manufactured by SMS Meer. Automatic ultrasonic inspection equipment has been manufactured by GE. Basic description of main pipe manufacturing and non-destructive testing equipment of SAWL pipe is provided below.

Manufacturing equipment			
Unit	**Manufacturer / Type**	**Scope**	**Other Characteristics**
Plate Edge Milling	SMS	Weld-seam preparation of the longitudinal plate edges with rotating cutter heads	Number of milling heads: 2 Plate feed: max. 20 m/min
Crimping Press	SMS	Two C-presses arranged opposite of each other to simultaneously crimp both plate edges	Crimping force for each C-press: 22MN
JCO® Pipe Forming	SMS	Press for the stepwise forming of the crimped steel plate into an open-seam pipe.	Diameter range: 16" – 56" Press force of the bending beam: 100MN Effective bending length : 19,100mm Synchronism accuracy of beam under load: 0,5mm
Pipe Finishing Press	SMS	For further closing of thick-walled pipes (especially with small diameter)	Diameter range: 16" – 56" Press force of the bending beam: 25MN Effective bending length : 13,000mm (max. pipe length: 12,300mm) Synchronism accuracy of beam under load: 0,5mm
Hydraulic tack-welding machine	SMS	For the temporary inert-gas welding of the open-seam pipe as preparation for the subsequent final inside and outside submerged-arc welding processes	Welding technology: Ar/CO2 MAG Welding speed: max. 8 m/min Welding wire diameter: 2,4-4,8mm Number of roller beams: 9

CORINTH PIPEWORKS S.A.

Manufacturing equipment			
Unit	**Manufacturer / Type**	**Scope**	**Other Characteristics**
SAW inside welding machine	SMS	For the execution of the ID SAW welding	Number of welding stations: 2 Welding process: SAW Number of welding heads: 1 for 3-ARC or 4-ARC Welding speed: 0,5 – 3 m/min
SAW outside welding machine	SMS	For the execution of the OD SAW welding	Number of welding stations: 2 Welding process: SAW Number of welding heads: 1 for 3, 4 or 5-ARC Welding speed: 0,5 – 3 m/min
Single-head Mechanical Expander	SMS	For the calibration of pipes	Cylinder force: 11MN Max. pipe length to be expanded (with pipe rotation): 12,8m (18,3m) Max. permanent expansion rate: 1,5% Cylinder positioning accuracy: ±1,0mm
Hydrostatic Pipe Tester	SMS	For high pressure testing of pipes	Testing fluid: Water (with appropriate corrosion and biological activity inhibitors) Maximum test pressure: 650bar (as far as max. end load is not exceeded) Pressure holding time range: 0 – 60s Inclination of press: 0 deg

CORINTH PIPEWORKS S.A.

Non Destructive Testing Equipment			
Scope	**Manufacturer / Type**	**UT Probes**	**Other Characteristics**
Ultrasonic inspection for laminar imperfections at plate surface	GE Type OBPE-Plate	24 straight broad beam probes (type IA-FR10.4,5x60 B test frequency 10 MHz, angle of incidence 0° 4.5x60 mm rectangular element, probe housing 18x70 mm)	Evaluation program "UNIVIS" for both calibration and automated testing. Plate Width: 1435 - 4800 mm Plate Thickness: 8 - 40 mm Test Speed: max. 20 m/min movement of oscillating device max. speed of plate depending on plate width (2 - 11 m/min) Pulse Repetition Frequency: max. 20,000 Hz. Probes Overlap: Approx. 4 mm.
Mill control ultrasonic inspection of the weld seam and HAZ, prior to pipe cold expansion, for the detection of longitudinal and transverse defects.	GE Type SNUP-LO/OFF	• 4 Composite angle beam probes Alternative type: W 70 K4 NB 1A, 4 MHz, 70°, 8x9 mm) W 60 K4 NB 1A, 4 MHz, 60°, 8x9 mm) W 60 K2 GC 2, 2 MHz, 60°, 14x14 mm) W 45 K4 NB 1A, 4 MHz, 45°, 8x9 mm) • 1 on-bead Wheel probe with three elements (two composite 45° angle probes for the detection of transverse defects and one normal probe for the control of continuous coupling).	Diameter: 16" - 60" (406 - 1524 mm) Wall Thickness: 8 - 40 mm Pipe Length: 8 – 18 m Pulse repetition frequency: Max. 20,000 Hz (typical 6000Hz divided by the number of testing cycles). Coupling medium: Water
Mill control digital radiography for 100% real time weld seam inspection.	YXRAY SYSTEMS RTS FD 1.2.165		• Voltage max. : 320Kv • Focal spot size: 0,4 mm / 0,8 kW and 1,0 mm / 1,8 kW
Final ultrasonic inspection of the weld seam and HAZ for the detection of longitudinal and transverse defects.	GE Type SNUP-LO/OFF-REP-PAT	• 8 Phased Array probes (3 MHz, 32 elements 14x14 mm) • 8 Phased Array probes (3 MHz, 20 elements, 8x9 mm) • 2 Composite angle beam probes (type W 45 K4 NB 1A. 4 MHz, 45°, 8x9 mm)	Diameter: 16" – 60" (406 – 1524 mm) Wall thickness: 8 – 40 mm Pipe Length: 8 – 18 m Longitudinal Testing Speed: Max. 20 m/min Pulse repetition frequency: Max. 20,000 Hz divided by the number of focal laws.

CORINTH PIPEWORKS S.A.

Non Destructive Testing Equipment			
Scope	**Manufacturer / Type**	**UT Probes**	**Other Characteristics**
		• 2 Composite angle beam probes (type W 70 K4 NB 1A, 4 MHz, 70°, 8x9 mm) • 2 Composite angle beam probes (type W 60 K4 NB 1A, 4 MHz, 60°, 8x9 mm) • 2 Composite angle beam probes (type W 60 K2 GC 2, 2 MHz, 60°, 14x14 mm)	
Portable UT equipment	KRAUTKRAMER USN 52 / USM 35 / StressTel FlawMike	45° (MWB45) / 60° (MWB60) / 70° (MWB70) 4MHz, 8x9mm MSEB4, 0° 4MHz, 3,5x10mm	
Pipe end radiography	P.SEIFERT – ERESCO 42MF2 (2 Units) P.SEIFERT – ERESCO 42MF3 (1Unit)		• Voltage max. : 200kV • Current max : 0,5-10 mA (4,5mA – 200kV)
Fluoroscopy	P.SEIFERT – ISOVOLT XS 225M2		Power: 225kV, 7mA
Computed radiography scanning system	GE CRxVision		BSR: (MR) 70 μm / 80 μm (HR) 35 μm / 40 μm TFT Monitor, 2MP, 1500:1 contrast ratio, 420 cd/qm brightness, 21.3 inch

CORINTH PIPEWORKS S.A.

D. PROCESS FLOW-CHART

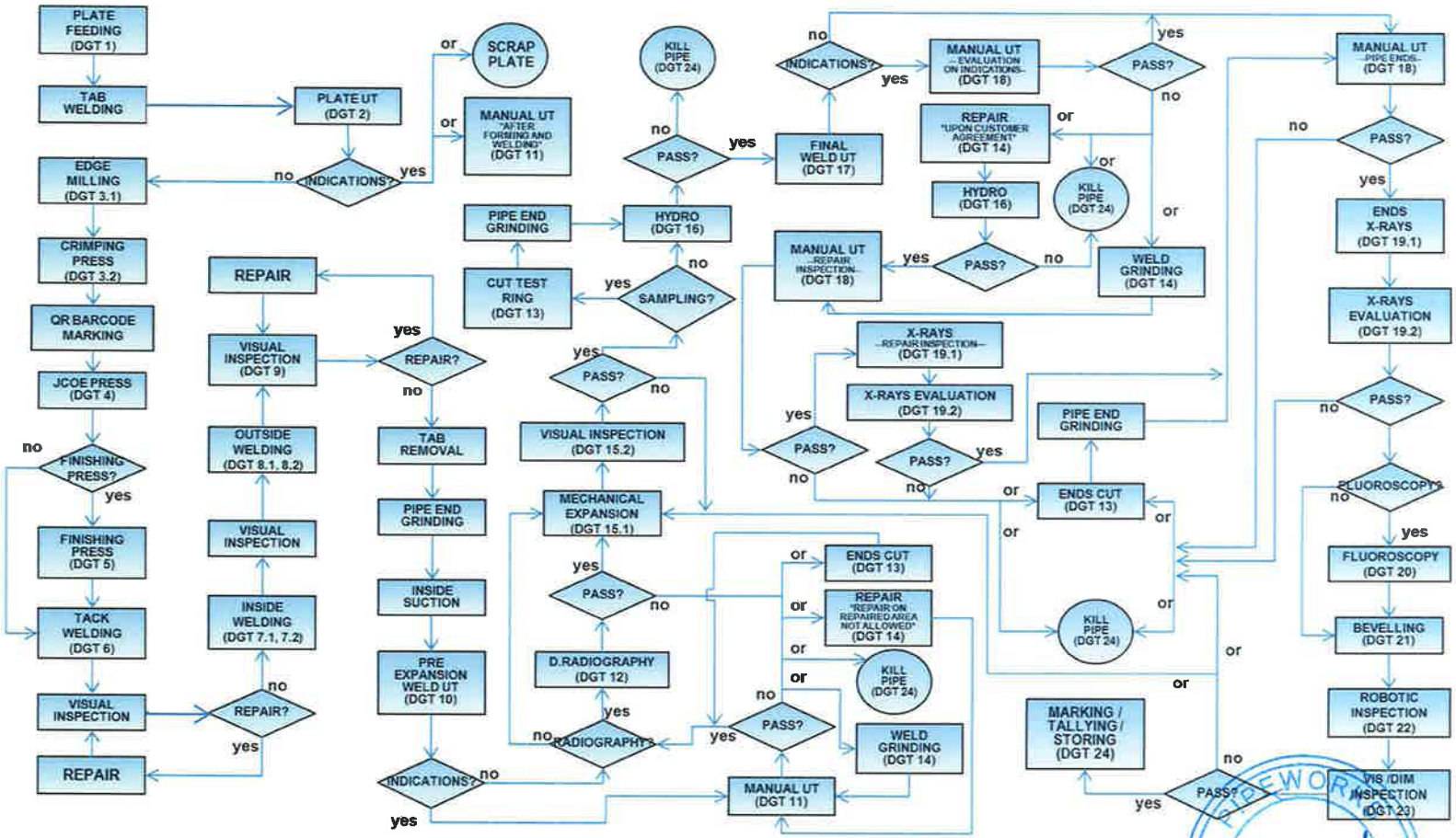

Process	Description
1. Steel Manufacturing	The steel manufacturing procedure shall be analytically described in the project-specific steel supplier MPS. The MPS defines and documents the critical variables of plate rolling practice, in order to ensure that the mechanical properties throughout the pipe are suitably uniform considering: • Plates characteristics and variability • Sensitivity of properties to rolling practice • Appropriate plate cropping distances • Tensile property changes inherent in pipe forming. The plates are accompanied with supplier certificates. Each plate is bearing suitable identification which includes the following information as a minimum: • Heat Nr • Plate Nr • CPW Order Nr • Weight • Width • Thickness • Length • Grade • Supplier's name • Date of production

CORINTH PIPEWORKS S.A.

Process	Description
2. Plate Reception	During their feeding in the mill, the plates are separately placed on a plate roller table using a plate positioning facility (semi-portal crane) with a vacuum lifting beam, with a carrying capacity of 35.0 t and marked with an internal traceability number. 1. Plate label shall include the following information: - Weight, - Grade, - Dimension, - Heat number and plate number, - Order number, - Production date, - Supplier 2. The plates shall not been damaged. 3. There shall be no serious rusting, especially from seawater. 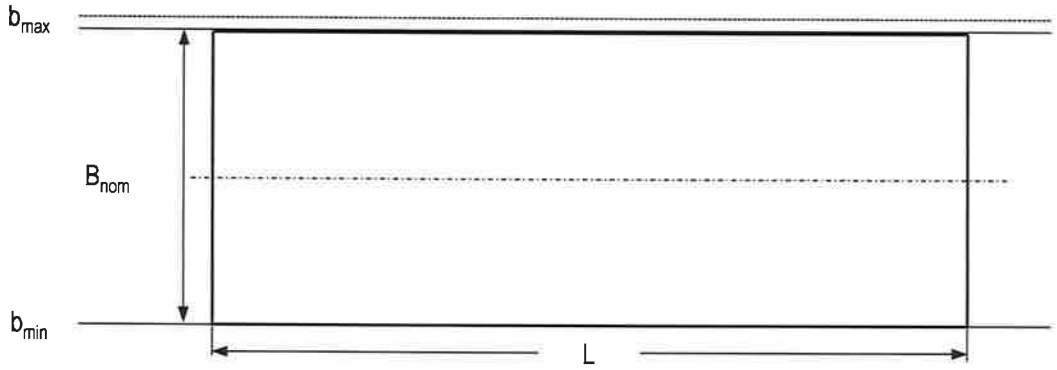 L = Plate Length B_{nom} = Nominal Width b_{min}, b_{max} = Width tolerances *Terminal DGT 1- Plate feeding: Input of plate traceability data* *Relevant Procedure –CPW-HSJ-110.0: Raw Material- Receipt, Feeding, Control*

CORINTH PIPEWORKS S.A.

Process	Description
3. Tab Welding	➢ Tab welding is manually operated, using semi-automatic Gas Shielded Metal Arc Welding (GMAW). ➢ The weld-on tabs are of the same material as used for the pipes in production with a length of approximately 300mm. ➢ A bevel is created on one end as preparation for the later welding. ➢ Tab welding and bevelling shall be according to the applicable tab welding parameters sheet. 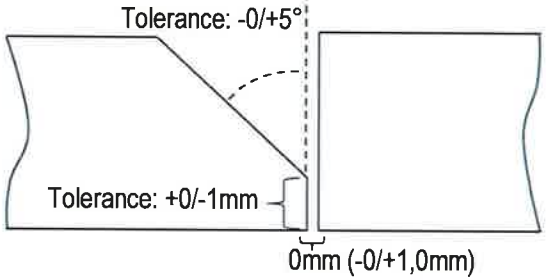 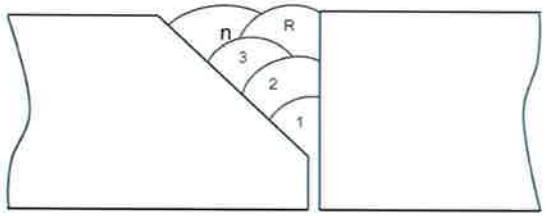 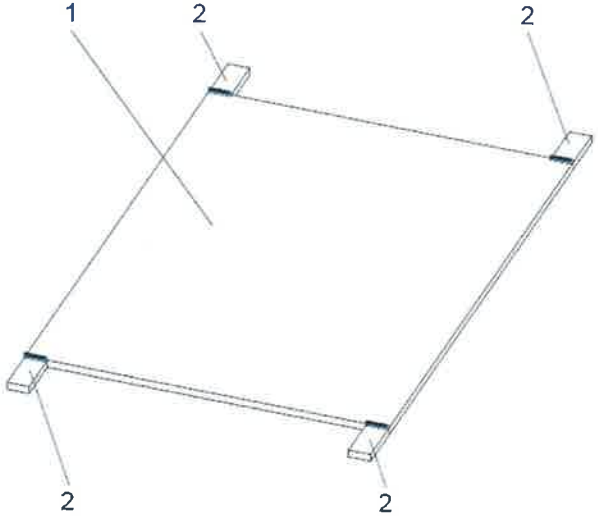 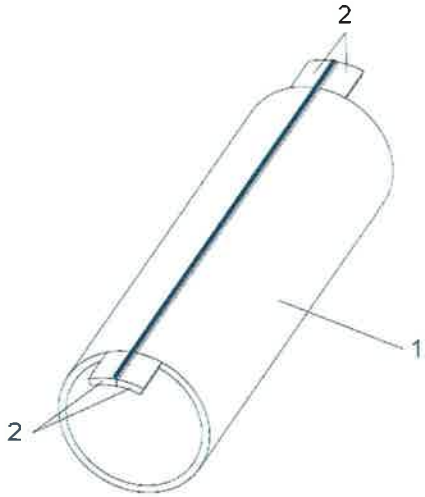 1: Tab Plates 2: Plate/Pipe 📖 *Relevant Procedure – CPW-T-J-200.0: SAWL Forming and Weld Preparation*

CORINTH PIPEWORKS

Process	Description
4. Plate / Pipe Identification	Individual pipes are automatically marked and identified with a controlled manner by assigning to each of them a unique pipe number. Type of pipe identification: Jxxx/y – a J: Symbol indicating SAWL Process Line xxx: Internal CPW's project serial number identifying the production of a specific diameter (3 digits) y: Process Sheet Sub-number (1 digit) a: Plate serial number from which the pipe has been produced (1 to 4 digits) *Relevant Procedure – CPW-T-HSJCL-310.0: Traceability During Manufacturing And Coating of HFW, SAWH & SAWL Pipes*
5. Plate Inspection for Laminar Imperfections	System: GE Type OBPE-Plate Probes: 24 normal broad beam probes, using the pulse reflection Test Speed: max. 20 m/min movement of oscillating device max. speed of plate depending on plate width (2 - 11 m/min) Marking: 3 paint marking devices, spraying from beneath the plate, one for each edge plus one for the body and ends Area of inspection: Plate surface & min. 15mm for the plate edges. Calibration block: Flat bottom Hall Acc. Criteria: As per EN ISO 10893-9 U1 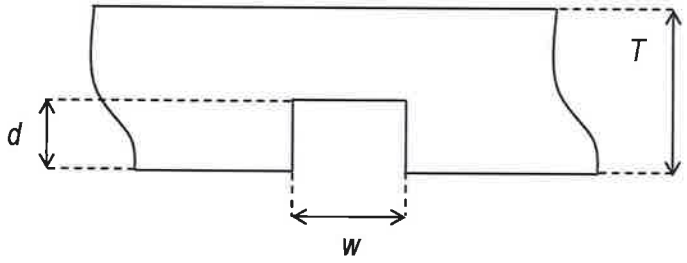 Diameter, w: 6.0mm, +10%, -0 Depth, T/4 < d < T/2 T: Nominal wall thickness *Terminal DGT 2 - Plate UT: Input of plate ultrasonic testing result* *Terminal DGT 11 - Pre expansion manual UT: Input of manual ultrasonic testing result* *Relevant Procedure – CPW-T-J-300.0: Ultrasonic Inspection*

CORINTH PIPEWORKS

Process	Description
6. Plate Edge Milling	Number of milling heads: 2 Milling head diameter: 850 mm Milling speed: 150 - 400 m/min Tolerances: B ≤ ± 0.3 mm C ≤ ± 0.5 mm G ≤ ± 1° E ≤ ± 1° F ≤ ± 0.5° 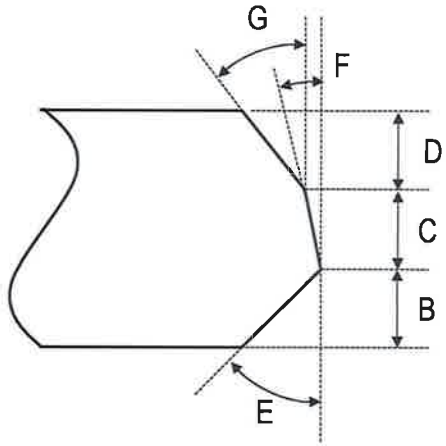 *Terminal DGT 3.1 - Edge milling: Input of plate edge milling action result* *Relevant Procedure – CPW-T-J-200.0: SAWL Forming and Weld Preparation*
7. Crimping	No of C-presses: 2 Crimping force of each C-press: 22 MN Crimping length per step: 2,300 mm Max deviation of crimped edge: 2mm Measuring points: Both plate edges (ends and middle) Frequency of measurement: At least 3 times per shift 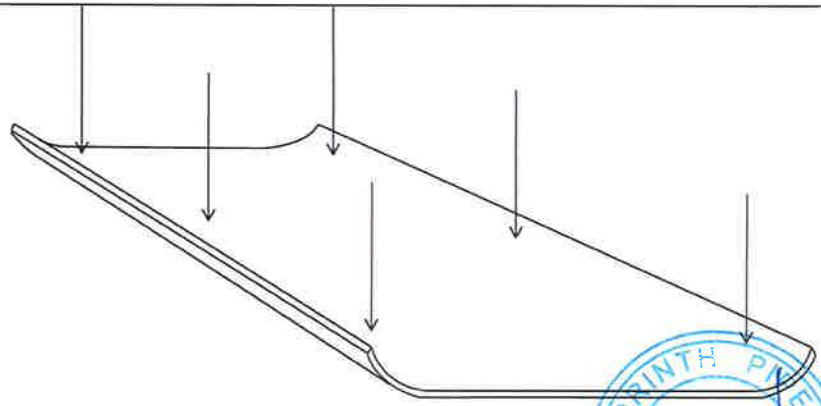 *Terminal DGT 3.2 - Crimping: Input of plate crimping action result* *Relevant Procedure – CPW-T-J-200.0: SAWL Forming and Weld Preparation*

CORINTH PIPEWORKS

Process	Description
8. JCO Press	Bending force: 100 MN Measurement of open seam gap: At three points (at the two ends and in the middle) Frequency of measurement: At least 3 times per shift 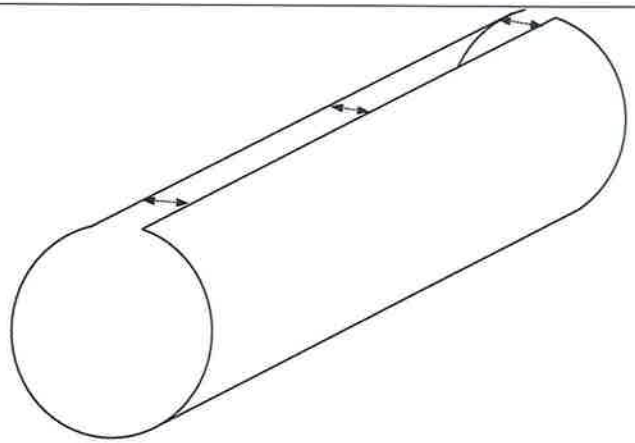 *Terminal DGT 4 - JCOE: Input of JCO action result* *Relevant Procedure – CPW-T-J-200.0: SAWL Forming and Weld Preparation*
9. Finishing Press	Bending force: 25 MN *Terminal DGT 5 - Finishing: Input of plate finishing result* *Relevant Procedure – CPW-T-J-200.0: SAWL Forming and Weld Preparation*
10. Tack Welding	Welding technology: Gas Metal Arc Welding (GMAW) Shielding gas: CO_2 or Ar/CO_2 Regular working speed: 2,5 – 6 m/min Maximum speed: 8 m/min Welding capacity: 1.500 A DC (max. 2.500 A DC) Torch guidance: Automatically by a laser seam tracking system *Terminal DGT 6 - Tack welding: Input of tack welding result* *Relevant Procedure – CPW-T-J-220.0: SAWL pipes welding*

CORINTH PIPEWORKS

Process	Description
11. Pipe Welding (Inside & Outside SAW)	<u>Inside Submerged Arc Welding</u> Number of welding stations: 2 Welding process: Submerged arc welding Welding heads: Up to 4, combined to form a single unit on the welding beam (one layer weld) Number of welding heads: 1 head for up to 4 ARC Welding speed: 0,5 – 3 m/min Weld seam positioning: 1G Weld position control: Visually by a video camera system Earthing medium: Brushes in contact with the pipe Electrodes arrangement: By motorized cross slide Process measuring system: Digital control system compares the measured welding process data with the pre-selected data and regulates the power sources and wire feeding for each arc. Welding arc striking: Produced by short-circuit, directly after contact of the electrodes with the pipe. <u>Outside Submerged Arc Welding</u> Number of welding stations: 2 Welding process: Submerged arc welding Number of welding heads: 1 head for up to 5 ARC Welding speed: 0,5 – 3 m/min Torch guidance: Automatically, by a laser seam tracking system Earthing medium: Brushes in contact with the pipe Electrodes arrangement: By motorized cross slide Process measuring system: Digital control system compares the measured welding process data with the pre-selected data and regulates the power sources and wire feeding for each arc. Welding arc striking: Produced by short-circuit, directly after contact of the electrodes with the pipe. *Terminal DGTs 7.1, 7.2 – Inside welding: Input of inside saw welding result* *Terminal DGTs 8.1, 8.2 – Outside welding: Input of outside saw welding result* *Relevant Procedure – CPW-T-J-220.0: SAWL pipes welding*

CORINTH PIPEWORKS

Process	Description
12. Initial Visual Inspection	At this stage the inside and outside weld seam is pre-inspected. *Terminal DGT 9 – Weld visual inspection: Input of saw weld initial visual inspection result*
13. Weld bead removal at pipe ends	Weld bead removal at pipe ends shall be: 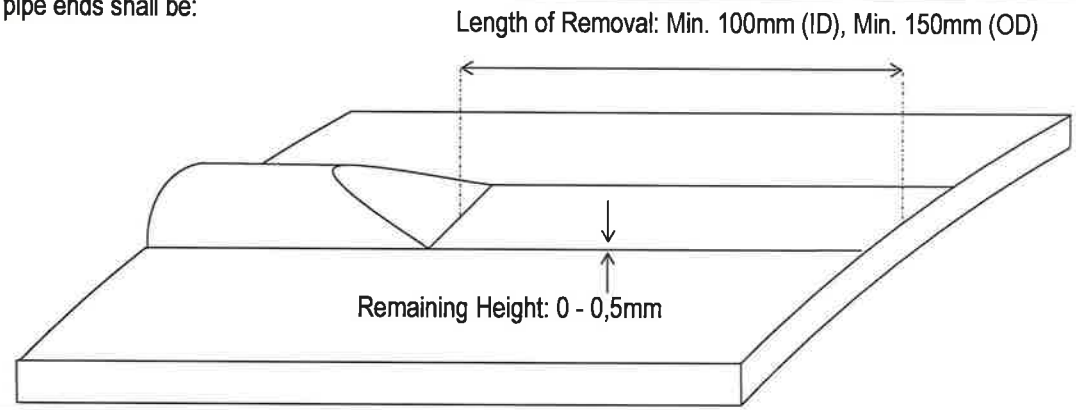
14. Mill Control WSUT Station Prior to Expander	Inspection System: GE Type SNUP-LO/OFF Pulse repetition frequency (PRF): Max. 20,000 Hz (typical 6000Hz divided by the number of testing cycles). For full testing mode, 13 cycles are activated with an individual PRF of ~460Hz. Marking: 2 paint marking devices each consisting of paint spray gun Weld Seam Tracking: Automated Laser seam tracking device, working free from wear without pipe contact using the triangulation method.

CORINTH PIPEWORKS

Process	Description

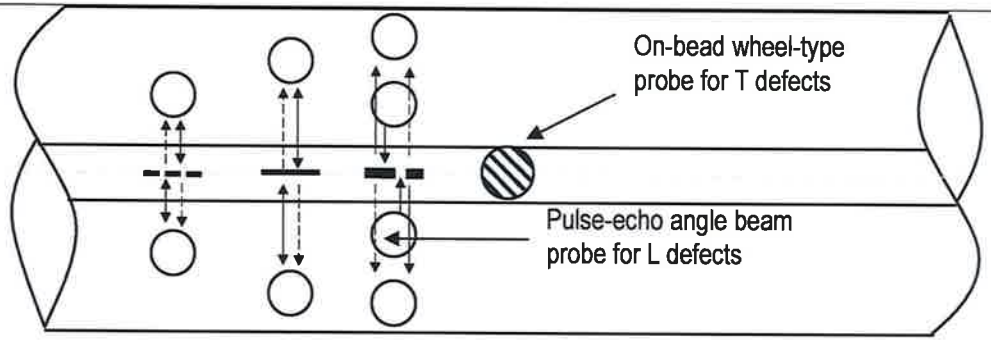

Type of Defect	Probe Description	Type of Probe	Test Frequency	Angle of Incidence	Element Size	Probe Housing
Longitudinal (L)	Composite angle beam probes	W 70 K4 NB 1A	4 MHz	70°	8x9 mm	Ø24
	Composite angle beam probes	W 60 K4 NB 1A	4 MHz	60°	8x9 mm	Ø24
	Composite angle beam probes	W 60 K2 GC 2	2 MHz	60°	14x14 mm	Ø40
	Composite angle beam probes	W 45 K4 NB 1A	4 MHz	45°	8x9 mm	Ø24
Transverse (T)	1 Wheel probe (3 elements)	-	-	2 x 45° (1 backward and 1 forward) 1 normal probe (for coupling control)		

Terminal DGT 10 – Pre expansion WSUT: Input of mill control weld seam UT result
Terminal DGT 11 – Pre expansion manual UT: Input of pre expansion manual UT result
Relevant Procedure – CPW-T-J-300.0: Ultrasonic Inspection

CORINTH PIPEWORKS

Process	Description
15. Digital Radiographic Inspection at the Weld Seam Area	By this method a 100% inspection of the seam length may be performed for internal control purposes and whenever 100% of weld length RT inspection is required. *Terminal DGT 12 – Digital Radiography: Input of digital radiographic inspection result* *Relevant Procedure – CPW-T-SJ-165.0: Radiographic and Fluoroscopic and Digital Radiographic Inspection*
16. Cold Expansion (Single-Head Mechanical Expander)	Cylinder force: 11 MN Max pipe length to expanded in a single section: 12,8 m Max. permanent expansion rate: 1,50 The outer diameter change (sizing ratio, S_r) of the first expanded pipe for a particular size / grade shall be measured by means of a pi-tape, and shall be derived by the following formula: $S_r = (\|D_a - D_b\|)/D_b$ Where: D_a = outside diameter after sizing in mm D_b = outside diameter before sizing in mm Sizing ratio for cold expanded pipe: Range 0,3 - 1,5 % Frequency of measurement: At least 1 every 4 hours *Terminal DGT 15.1 – Mechanical expansion: Input of mechanical expansion result* *Terminal DGT 15.2 – Post expansion visual inspection: Input of the post expansion visual inspection result and input of the specified sampling frequency scheme for the laboratory tests* *Relevant Procedure – CPW-T-J-200.0: SAWL Forming and Weld Preparation*

CORINTH PIPEWORKS

Process	Description	
17. Hydrostatic Testing	Testing purpose:	Ascertain the strength of the weld or detect any potential welding defects
	Testing frequency:	All pipes (+ repaired pipes)
	Pressure calculation formula:	$P = \frac{2\ S\ t}{D}$ Where: *S* is the hoop stress, expressed in megapascals, equal to 95% SMYS *t* is the minimum wall thickness, expressed in millimetres, *D* is the specified outside diameter, expressed in millimetres.

WT (mm)	Pressure (bar)
11	Min. 111
14,2	Min. 143
16	Min. 161
20	Min. 201

Testing Time:	Min. 10 sec
Demonstration of test pressure:	Digital recording unit and pressure gauges
Pipe positioning:	The weld seam shall be positioned in a way that any pinhole leak or weeping is clearly visible.
Equipment characteristics	<u>Equipment 1</u> Test pressure: 5 – 32 MPa / 50 - 320 bar Pre-selectable Pressure Holding Time: 0 – 60 s Maximum oil pressure: 300 bar <u>Equipment 2</u> Test pressure: 5 – 65 MPa / 50 - 650 bar Pre-selectable Pressure Holding Time: 0 – 60 s Maximum oil pressure: 330 bar

Terminal DGT 16 – Hydro testing: Input of hydraulic testing result

Relevant Procedure – CPW-T-SJ-140.0: Bevelling / Hydrostatic Testing

CORINTH PIPEWORKS S.A.

Process	Description
18. Sampling / Laboratory Testing	➢ Test rings are cut by plasma cutting from selected finished pipes according to the applicable test frequency. ➢ Rings are used for the preparation of specimens that are forwarded to the laboratory for testing. ➢ In order to maintain traceability, all specimens are identified throughout their preparation with the number of the pipe from which they were sectioned. ➢ The exact number, type, frequency of tests (or retests), the sample location and orientation as well as the acceptance criteria are according to the requirements of ITP_05_18_SAWL, latest revision.
19. Qualification of Personnel	According to the requirements of ITP_05_18_SAWL, latest revision.
20. Final Automatic Weld Seam Ultrasonic (WSUT)	Purpose: Detection for L& T defects at the weld seam area and HAZ System: GE Type SNUP-LO/OFF-REP-PAT Weld Alignment System: 2 automated Laser seam tracking devices (one for each test frame), working free from wear without pipe contact using the triangulation method. Pulse repetition frequency (PRF): Max. 20,000 Hz. PRF per focal law depends on the particularly selected inspection design. Untested ends: Untested ends are defined during initial calibration of equipment. Marking: 3 Paint marking devices, each consisting of paint spray gun

Code	Type	Freq.	Elem.	Size	Angle of incidence	Scope
PA1	Phased Array Probe W3GPA32	3 MHz	32	14x14mm	Variable, 0°, 35°-70°	For longitudinal and/or transverse defects
PA2	Phased Array Probe W3NPA20	3 MHz	20	8x9 mm	Variable, 0°, 35°-70°	For longitudinal and/or transverse defects
C	Composite angle beam probes type W 45 K4 NB 1A, W 60 K4 NB 1A, W 70 K4 NB 1A	4 MHz	1	8x9	45°, 60° or 70°	For longitudinal and/or transverse defects

Calibration Block:

CORINTH PIPEWORKS S.A.

Process	Description

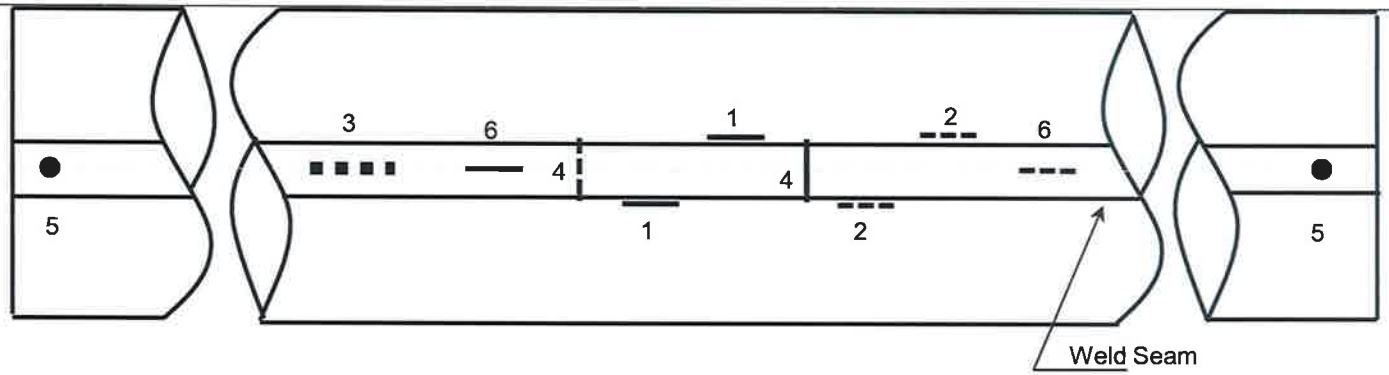

Position		Artificial Reflector				
		Type	Depth %	Max. Length (mm)	Max. Width (mm)	Diameter (mm)
Parallel to the weld seam on both sides	(1), (2)	N5	5	50	1,0	-
Along weld seam centreline	(6)	N5	5	50	1,0	-
Transverse to the weld	(4)	N5	5	50	1,0	-
At mid thickness of the weld	(3)	SDH	-	-	-	6
Weld centreline	(5)	RDH	-	-	-	3

Terminal DGT 17 – Final WSUT: Input of the final automatic weld seam UT result

Relevant Procedure – CPW-T-J-300.0: Ultrasonic Inspection

CORINTH PIPEWORKS

Process	Description	
21. Manual Ultrasonic Inspection	Purpose:	- Inspection of each weld repair and start-stop - Evaluation of indications of the AWSUT (suspect areas) - Untested weld at pipe ends (area not covered by AUT due to equipment limitations) for at least 25mm in excess of the unexplored zone. - Pipe ends for L & T defects (50mm wide zone)
	Technique:	Pulse-echo
	Method (Acc. Criteria):	Weld seam inspection as per EN ISO 10893-11 (U2/U2H) Pipe ends inspection for L & T defects shall indicate no cracks.
	Coupling medium:	Gel form or water
	Terminal DGT 18 – Manual UT: Input of manual UT result (pipe ends, evaluation on AWSUT indications, repaired area inspection) *Relevant Procedure – CPW-T-J-300.0: Ultrasonic Inspection*	
22. Radiographic Inspection of Weld Seam at Pipe Ends and Weld Repairs	Testing purpose:	Detection of defects *(such as cracks, lack of fusion, lack of penetration, inclusions, undercuts)* in the weld and the heat affected zone (HAZ).
	Equipment *(for pipe ends)*:	ERESCO 42 MF2 & 42 MF3 *(Power: 200kV, 10mA / Focal spot size: 3mm (1,5IEC) / Angle: 40° X 60°)*
	Equipment *(for weld repairs)*:	ISOVOLT XS 225M2 *(Power: 225kV, 7mA / Focal spot size: 0,4mm X 0,4mm / Angle : 40°)*
	Evaluation medium:	Fine-grain, high-contrast direct film with lead screen or Digital imaging medium (phosphor plate)
	Film / Plate overlap	At least 10mm
	Technique:	Single-Wall Single Image technique (S.W.S.I)
	Equipment:	GE CRXVision (with Rhythm RT/Review software) flatbed digitizer, with the ability to scan and process imaging plates.
	Imaging medium:	Highly flexible imaging phosphor plates (IPs)
	Image quality indicators:	Wire-type image quality indicators (IQIs) acc. ISO 19232-1 and duplex IQIs acc. ISO 19232-5. Essential wire diameter as per EN ISO 3183 Table M.11
	Verification of equipment:	CR system (including imaging plates and monitor) is validated on a weekly basis in accordance to EN 14784-1.
	Acc. Criteria:	As per EN ISO 3183 § M.7.5.6.4 & Table M.10
	Terminal DGT 19 – Ends X-Rays: Input of the radiographic inspection result for the weld seam at pipe ends and weld repairs *Relevant Procedure – CPW-T-SJ-165.0: Radiographic and Fluoroscopic and Digital Radiographic Inspection*	

CORINTH PIPEWORKS

Process	Description
23. End Bevelling	Bevel Requirements: ➢ Smooth without any "curling" or other surface irregularities ➢ Both the external and the internal bevel angles shall be cleaned from burr. ➢ Bevel "root face" (w): 30° - 35° ➢ Bevel angle (*a*°): 1,6 mm (+0.8 mm, - 0.0 mm) 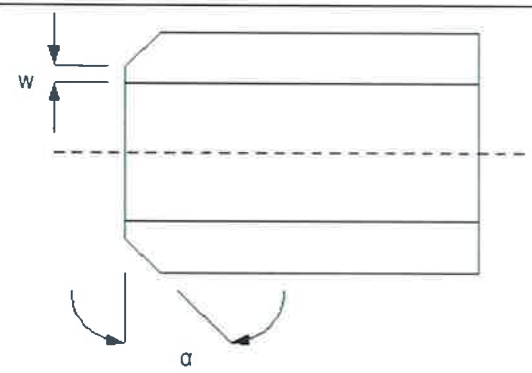 *Terminal DGT 21 – End Beveling: Input of the beveling result*
24. Visual Inspection	The pipes are subjected to visual (internal and external surface) inspection acc. to the requirements of ITP_05_18_SAWL. *Terminal DGT 23 – Visual / Dimensional inspection: Input of the visual / dimensional inspection result and the pipe quality* *Relevant Procedure – CPW-T-S-170.0: Visual – Dimensional inspection*
25. Pipe Straightness	Measuring tool(s): Taut string and tape Measuring position(s): Min. 3 (Adjacent to weld, 90° and 180°) Out-Of-Straightness: Max. 0,2% of pipe length, measured as the maximum gap between the pipe and the taut string. Frequency: Measurement & Record: 1/10 pipes (min every 4 hours) 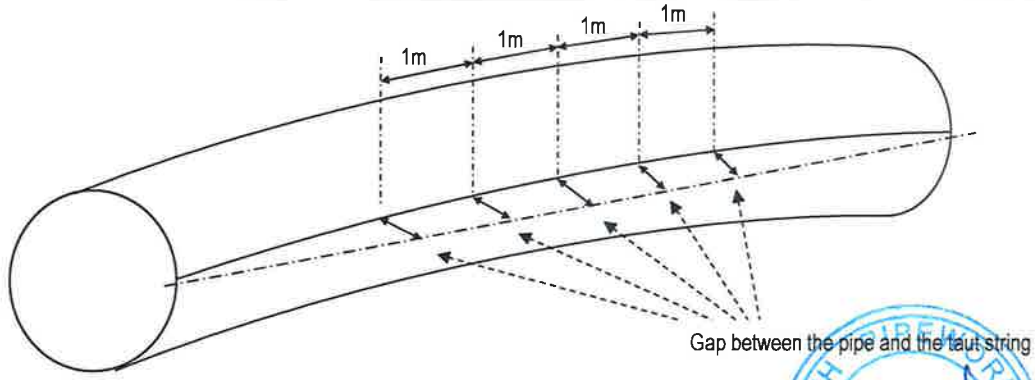 *Terminal DGT 23 – Visual / Dimensional inspection: Input of the visual / dimensional inspection result and the pipe quality* *Relevant Procedure – CPW-T-S-170.0: Visual – Dimensional inspection*

Process	Description
26. End Squareness	Measuring tool(s): End squareness tool or angle gauge Measuring position(s): At bevel face Out-Of-Squaress: Max. 0,005xD, but max. 1,6mm Frequency: Measurement & Record: 1/10 pipes (min every 4 hours) 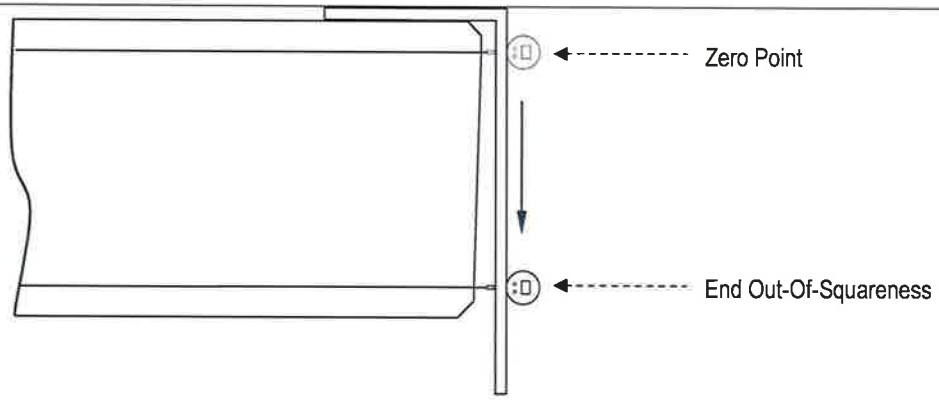 *Terminal DGT 23 – Visual / Dimensional inspection: Input of the visual / dimensional inspection result and the pipe quality* *Relevant Procedure – CPW-T-S-170.0: Visual – Dimensional inspection*
27. Weld Misalignment	Measurement: During macro examination Misalignment: max. 3 mm Frequency: 1 / shift 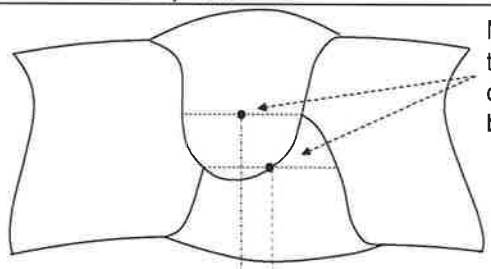 Midpoints of two parallel lines across the weld bead that are parallel to the tangent of the pipe surface and cross the intersections of the internal and external weld bead fusion lines Misalignment distance, which is the distance between the two midpoints but perpendicular to the tangent of the pipe surface

CORINTH PIPEWORKS

Process	Description
28. Radial Offset	Measuring tool(s): Weld gauge Tolerances: max. 0,1xWT Frequency: Measurement & Record: 1 / 10 pipes (min every 4 hours) or when visually detected 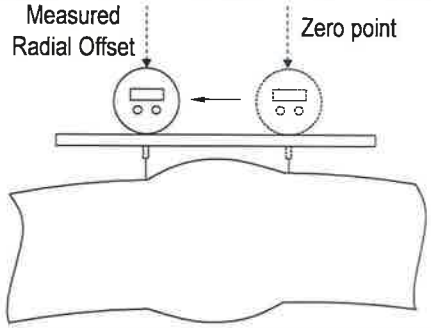 *Terminal DGT 23 – Visual / Dimensional inspection: Input of the visual / dimensional inspection result and the pipe quality* *Relevant Procedure – CPW-T-S-170.0: Visual – Dimensional inspection*
29. Weld Bead Height	Measuring tool(s): Weld gauge Tolerances: WT (mm) / Max. Internal / Max. External WT ≤ 15 / 3mm / 3mm WT ≥ 20 / 3mm / 4mm Frequency: Measurement & Record: 1/10 pipes (min every 4 hours) 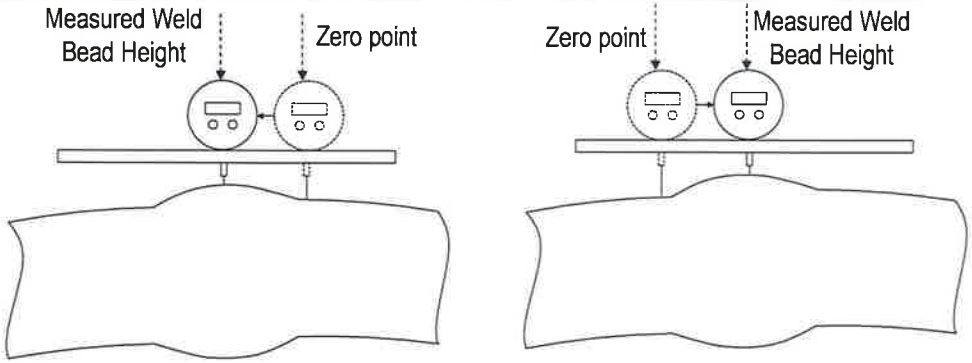 *Terminal DGT 23 – Visual / Dimensional inspection: Input of the visual / dimensional inspection result and the pipe quality* *Relevant Procedure – CPW-T-S-170.0: Visual – Dimensional inspection*

CORINTH PIPEWORKS S.A.

Process	Description
30. Wall Thickness	Measuring tool(s): Mechanical gage or UT thickness tester. Measuring Position(s): Adjacent to weld (1, 2). At 90° from weld (3) At 180° from weld (4) Tolerances: Frequency: Measurement: Each pipe Record: 1 / 10 pipes (min every 4 hours) *Terminal DGT 23 – Visual / Dimensional inspection: Input of the visual / dimensional inspection result and the pipe quality* *Relevant Procedure – CPW-T-S-170.0: Visual – Dimensional inspection*
31. Diameter	Tolerances: Ends (ID): ±1,2mm Body (OD): ±0,005D, but max. ±4mm Frequency: Ends: Measurement & Record: Each pipe end Body: Measurement & Record: 1/10 pipes (min every 4 hours) Terminal DGT 23 – Visual / Dimensional inspection: Input of the visual / dimensional inspection result and the pipe quality *Relevant Procedure – CPW-T-S-170.0: Visual – Dimensional inspection*

WT (mm)	Tolerance
10 < WT < 15	-5% / +10%
15 ≤ WT < 20	-5% / +1,5mm
WT ≥ 20	-1,0mm / +1,5mm

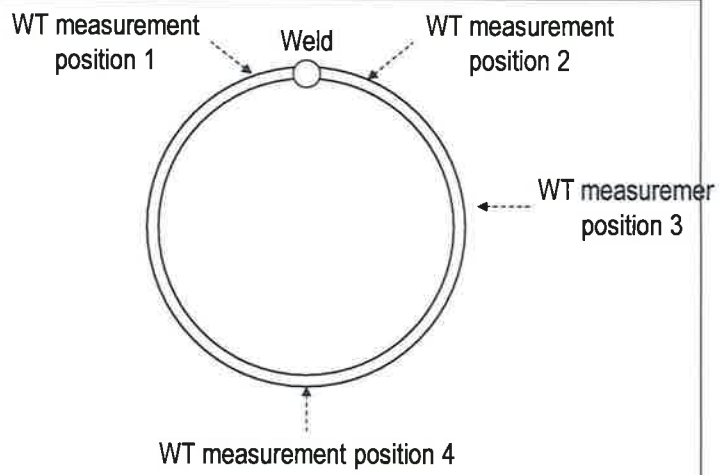

CORINTH PIPEWORKS S.A.

Process	Description
32. Out-Of-Roundness	Measuring Position(s): At min. 4 positions equally spaced along pipe circumference. Tolerances: Ends: max. 4mm Body: max. 0,015D, but max. 15mm (for D/T≤75) Frequency: Ends: Measurement & Record: Each pipe end Body: Measurement & Record: 1/10 pipes (min every 4 hours) 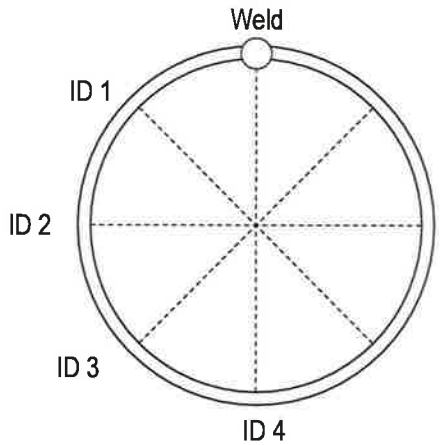 *Terminal DGT 23 – Visual / Dimensional inspection: Input of the visual / dimensional inspection result and the pipe quality* *Relevant Procedure – CPW-T-S-170.0: Visual – Dimensional inspection*
33. Weld Peaking at Pipe Ends	Measuring tool(s): Template, oriented transverse to the pipe axis and has a length of 200 mm. Tolerances: Max. 1,5 mm Frequency: Measurement & Record: Each pipe, both ends 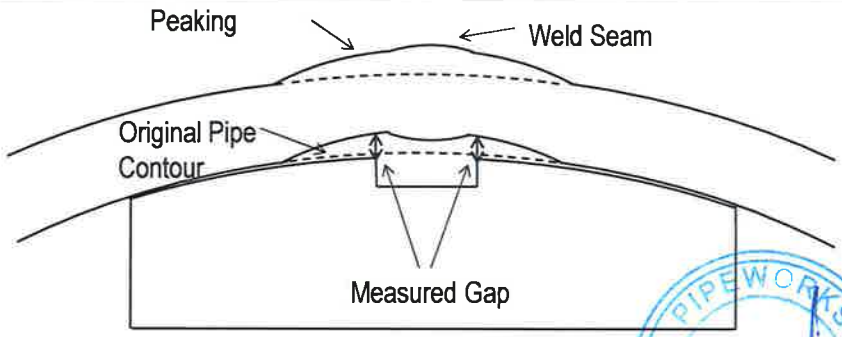 *Terminal DGT 23 – Visual / Dimensional inspection: Input of the visual / dimensional inspection result and the pipe quality* *Relevant Procedure – CPW-T-S-170.0: Visual – Dimensional inspection*

CORINTH PIPEWORKS S.A.

Process	Description
34. Residual Magnetism	Measuring tool(s): Hall-effect gaussmeter Measuring Position(s) 4 reading, app. 90° apart at each pipe end Tolerances: Max. 30 Gauss Frequency: Measurement & Record: 1/10 pipes (min every 4 hours) *Terminal DGT 23 – Visual / Dimensional inspection: Input of the visual / dimensional inspection result and the pipe quality* *Relevant Procedure – CPW-T-S-170.0: Visual – Dimensional inspection*
35. Treatment of Surface Defects by Grinding	➢ All dressable surface defects shall be dressed out by grinding. ➢ The grinding shall be carried out in such a way that the dressed area blends smoothly with the contour of the pipe. ➢ Complete removal of defects shall be verified by local visual inspection. ➢ To be acceptable, the wall thickness in the ground area is measured to verify that is within the thickness tolerances and the complete defect removal shall be ensured.
36. Treatment of Surface Defects by Repair Welding	Welding Procress: manual Shielded Metal Arc Welding (SMAW) Position: Horizontal - PA (Flat) / 1G No of Passes: Multiple with single electrodes Inspection: Hydrostatic test and NDE (UT and/or X-Ray examination) 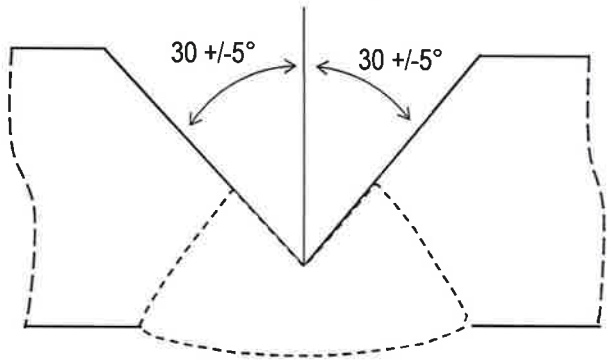 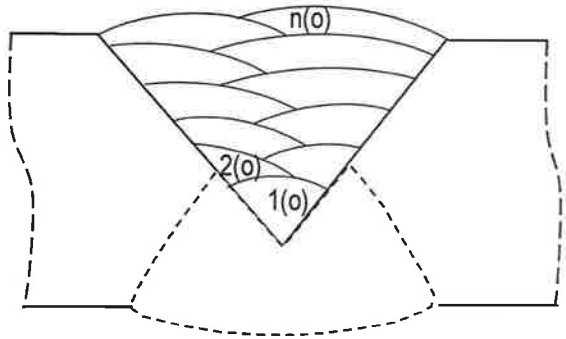 *Terminal DGT 13 – Ends cut: Input of the pipe ends cut activity* *Terminal DGT 14 – Repairs: Input of the weld seam repair or grinding activity* *Relevant Procedure – CPW-T-SJ-225.0: Repairs*

CORINTH PIPEWORKS S.A.

Process	Description
37. Tallying / Marking	➢ The length and the weight of each pipe are automatically measured and both values are recorded in a computer database. ➢ At the end of production a *Tally Sheet* is printed that contains the following information for each individual pipe: 1. Pipe number, 2. Heat number, 3. Length ,and 4. Weight. ➢ Additionally, total quantity (pieces, total length and weight) of production are given. ➢ All pipes, which have successfully passed all inspections and controls, are marked according to ITP_05_18_SAWL, latest revision. ➢ The final marking of the pipes to be coated should be performed after external and/or internal coating application. 🖳 *Terminal DGT 24 – Tallying: Input of pipe final length and weight* 🕮 *Relevant Procedure – CPW-T-S-180.0: Weighing – Tallying – Marking*

CORINTH PIPEWORKS S.A.

CORINTH PIPEWORKS	QUALITY DEPARTMENT	PAGE 1/28
	THISVI PLANT	

TITLE	MANUFACTURING PROCEDURE SPECIFICATION
DOCUMENT No.	MPS_04_18_SAWH
REVISION No.	0
PRODUCTION LINE	SAWH
CUSTOMER / PROJECT	ICGB INTERCONNECTOR INTERCONNECTOR GREECE - BULGARIA
SIZE / GRADE / QUANTITY	

Pos. No	OD (in)	WT (mm)	Grade PSL2	Type	Lengths	Purpose	Quantity (m)
1	32	11	L450ME	SAWH	12m / 18m	Line	91.084
3	32	14,2	L450ME	SAWH	12m/18m	Line	43.591
5	32	16	L450ME	SAWH	12m / 18m	Line	20.416
9	32	11	L450ME	SAWH	12m	Emergency stock	216
10	32	14,2	L450ME	SAWH	12m	Emergency stock	96
11	32	16	L450ME	SAWH	12m	Emergency stock	60

PRELIMINARY

	ISSUED	REVIEWED / APPROVED	CUSTOMER APPROVED
DATE	11/01/2018	12/01/2018	
NAME / SIGNATURE	P. FOTOPOULOS QC MGR	N. VOUDOURIS QUALITY DIRECTOR	CORINTH PIPEWORKS S.A.

Contents

A. INTRODUCTION 4
B. TERMS AND ABBREVIATIONS 5
C. DESCRIPTION OF EQUIPMENT 9
D. PROCESS FLOW-CHART 11
1. Steel Manufacturing 12
2. Coil Reception and Cross Welding 12
5. Pipe Identification 14
6. SAW Welding 14
7. Initial Visual Inspection 15
8. Weld bead removal at pipe ends 15
9. Hydrostatic Testing 15
10. Sampling / Laboratory Testing 17
11. Qualification of Personnel 17
12. Pipe Body Inspection for Laminar Imperfections 17
13. Final Automatic Weld Seam Ultrasonic (WSUT) 19
14. Manual Ultrasonic Inspection 21
15. Radiographic Inspection of Weld Seam at Pipe Ends and Weld Repairs 21
16. End Bevelling 22
17. Visual Inspection 22
18. Pipe Straightness 22
19. End Squareness 23
20. Weld Misalignment 23
21. Radial Offset 24
22. Weld Bead Height 24
23. Wall Thickness 25

CORINTH PIPEWORKS S.A.

24. Diameter 25
25. Out-Of-Roundness 26
26. Weld Peaking at Pipe Ends 26
27. Residual Magnetism 27
28. Treatment of Surface Defects by Grinding 27
29. Treatment of Surface Defects by Repair Welding 27
30. Tallying / Marking 28

CORINTH PIPEWORKS S.A.

A. INTRODUCTION

The present Manufacturing Procedure Specification (MPS) describes the basic manufacturing steps as well as quality control activities, which are involved with the production and inspection of *Submerged Arc Welded Helical (SAWH)* seam steel pipes at the Corinth Pipeworks SAWL mill, located at Thisvi, Greece. This document has been issued according to the requirements of the following specifications (latest editions):

The applied specifications/standards/procedures are:

Applicable Standards, Specifications & Procedures
Code or Number / Title
ISO 3183:2012 (Including Annex M) / Petroleum and natural gas industries — Steel pipe for pipeline transportation systems Licensed
Technical Specification for Supply of Line Pipes DN800, Project IGB
ITP_06_18_SAWH / Inspection and Test Plan (ITP)

CORINTH PIPEWORKS S.A.

B. TERMS AND ABBREVIATIONS

TERM	DEFINITION
Calibration	The procedure of comparison and adjustment to a standard (master) of known accuracy.
Coating	External coating or internal lining
Coil Number	The sequential number assigned by Corinth Pipeworks to each coil from the same thickness and grade of material.
Conformance	Compliance with specified requirements.
Documentation	Recorded information.
Heat	Steel material originating from one final melt.
Inspection and Test Plan (ITP)	A document coning information about the quality schedule of a specific customer, order or project, such as type and frequency of tests, acceptance criteria, hold-points, etc.
Manufacturing Procedure Specification (MPS)	A document containing information about the manufacturing steps that will be followed for the execution of the production for a specific customer, order or project.
Non- conformance	Any deviation form specified requirements.
Pipe Number	A unique identification number for pipe(s) produced under the same sub number of Process sheet number. It includes Production Serial Number and Pipe Serial Number.
Procedure	Organization's documented method for performing an activity under controlled conditions.
Process Sheet (PS)	Master document for controlling operations, special processes, examinations, tests, hold-points, inspections and acceptance criteria.
Production Serial Number	The sequential serial number assigned to each product (pipe) manufactured from the same thickness and grade of material.
Qualified Personnel	Individuals with characteristics or abilities gained through education, training, experience or examination.

CORINTH PIPEWORKS S.A.

TERM	DEFINITION
Quality Control	Any inspection, test, or examination performed to ensure that materials products or services conform to specified requirements.
Repair	The process of restoring a non-conformance, (e.g. grinding, welding for welded pipe).
Standard	A prescribed set of conditions and requirements in the form of published document.
Verification	The process of determining through marking and records conformance to specified requirements.
Visual Examination	Examination of parts and equipment for visible defects in material and workmanship.

ABBREVIATION	EXPLANATION
API	American Petroleum Institute
AWPUT	Automatic Weld Seam Ultrasonic Testing
ASNT	American Society for Nondestructive Testing
ASME	American Society of Mechanical Engineers
ASTM	American Society of Testing and Material
AWSUT	Automatic Weld Seam Ultrasonic Testing
BSR	Basic Spatial Resolution
CPW	Corinth Pipeworks S.A.
CR	Computed Radiography

CORINTH PIPEWORKS S.A.

ABBREVIATION	EXPLANATION
DAC	Distance / Amplitude Correction
DGT	Digital Gathering Terminal
DWTT	Drop Weight Tear Testing
EN	European Norm
FBH	Flat Bottom Hole
FBUT	Full Body Ultrasonic Testing
GMAW	Gas Metal Arc Welding
HAZ	Heat Affected Zone
HSLA	High Strength Low Alloyed
ID	Inside Diameter
IIW	International Institute of Welding
IQI	Image Quality Indicator
ISO	International Organization for Standardization
ITP	Inspection and Test Plan
MPS	Manufacturing Procedure Specification
MTC	Mill Test Certificate
NCR	Non-Conformance Report

CORINTH PIPEWORKS S.A.

ABBREVIATION	EXPLANATION
NDE	Non Destructive Examination
NDT	Non Destructive Testing
OD	Outside Diameter
PA	Phased Array
PRF	Pulse Repetition Frequency
QC	Quality Control
RDH	Radial Drilled Hole
SAW	Submerged Arc Welding
SAWH	Submerged Arc Welding Helical
SDH	Side Drilled Hole
SMAW	Shielded Metal Arc Welding
SMYS	Specified Minimum Yield Strength
SWSI	Single Wall – Single Image
WPQR	Welding Procedure Qualifiction Record
WPS	Welding Procedure Specification
WSUT	Weld Seam Ultrasonic Testing

CORINTH PIPEWORKS S.A.

C. DESCRIPTION OF EQUIPMENT

UNIT	YEAR	PIPE DIAM. (")	STRIP WIDTH (mm)	WALL THICKNESS (mm)	PIPE WEIGHT (Kgr/m)	PIPE LENGTH (m)	TACK WELDING (m/min)	MATERIAL QUALITY	WELDING SPEED (m/min)	TEST PRESSURE (BAR)	FACE PLATE SPEED (rpm)
SPM (1ST STEP) INCLUDING COIL FEEDING - DECOILING – ID COIL END WELDING- EDGE MILLING - FORMING - TACK WELDING AND PIPE CUTTING	2000	24-100	1000-1850	6-25	max 1580	8-18	9 max	max API 5L/ISO 3183 grade X-80M	4-9		
OFF LINE WELDING STATION 1,2,3	2001	24-100		6-25	max 1580	8-18			0,5-3		
OFF LINE WELDING STATION 4	2008	24-100		6-25	max 1580	8-18			0,5-3		
OD COIL END WELDING MACHINE	2000	24-100		6-25					0,5-3		
HYDROSTATIC TESTING MACHINE	2000	24-100		6-25	max 1580	8-18				up to 320	
PIPE END BEVELLING MACHINE	2000	24-100		6-25	max 1580	8-18					6-60

CORINTH PIPEWORKS S.A.

Non Destructive Testing Equipment			
Scope	**Manufacturer / Type**	**UT Probes**	**Other Characteristics**
WELD SEAM AND HAZ INSPECTION FOR LONGITUDINAL AND TRANSVERSE DEFECTS	KRAUTKRAMER SNUP/REP (s.n. 771733)	10 PROBES W45Z4NB18, 45°, 4MHz, 8X9mm W60Z4NB18, 60° 4MHz, 8X9mm W70Z4NB18, 70°, 4MHz, 8X9mm IA-FG10.6X35A, 0° , 10MHz, 6X35mm	• UNIVIS SYSTEM WITH 16 CHANNEL CAPACITY • PIPE DIAMETER: 24" – 100" • WALL THICKNESS: 5,0mm – 25,0 mm • SCANNING SPEED: 20 m/min max. • PULSE REPETITION FREQUENCY: 20.000Hz • ELECTRONIC STORAGE AND EVALUATION OF RESULTS
PIPE BODY UT INSPECTION FOR LAMINAR DEFECTS (FBUT)	KRAUTKRAMER OPR (s.n. 771733)	6 PROBES SEG 5NC, 0°, 5MHz, 6mm x 25mm	• UNIVIS SYSTEM WITH 16 CHANNEL CAPACITY • PIPE DIAMETER: 24" – 100" • WALL THICKNESS: 5,0mm – 25,0 mm • SCANNING SPEED: 20 m/min max. • PULSE REPETITION FREQUENCY: 20.000Hz • ELECTRONIC STORAGE AND EVALUATION OF RESULTS
PORTABLE UT EQUIPMENT	KRAUTKRAMER USN 52 / USM 35 / STRESSTEL FLAWMIKE	45° (MWB45) / 60° (MWB60) / 70° (MWB70) 4MHZ, 8X9MM MSEB4, 0° 4MHZ, 3,5X10MM	
PIPE END RADIOGRAPHY	P.SEIFERT – ERESCO 42MF2 (2 UNITS) P.SEIFERT – ERESCO 42MF3 (1UNIT)		• VOLTAGE MAX. : 200KV • CURRENT MAX : 0,5-10 MA (4,5MA – 200KV)
COMPUTED RADIOGRAPHY SCANNING SYSTEM	GE CRXVISION		BSR: (MR) 70 MM / 80 MM (HR) 35 MM / 40 MM TFT MONITOR, 2MP, 1500:1 CONTRAST RATIO, 420 CD/QM BRIGHTNESS, 21.3 INCH

CORINTH PIPEWORKS S.A.

D. PROCESS FLOW-CHART

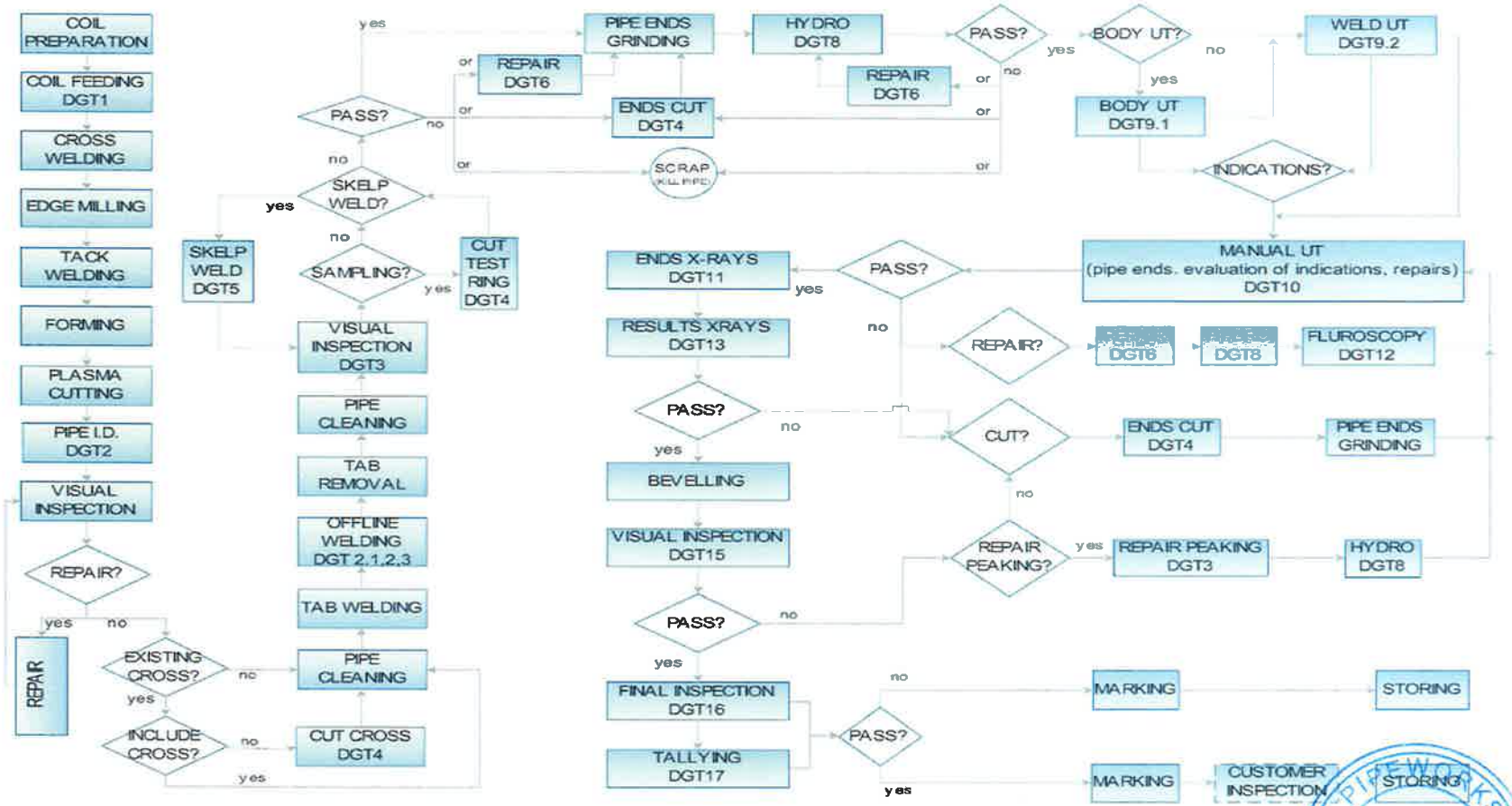

CORINTH PIPEWORKS S.A.

Process	Description
1. Steel Manufacturing	The steel manufacturing procedure shall be analytically described in the project-specific steel supplier MPS. The coils are accompanied with supplier certificates. Each coil is bearing suitable identification which includes the following information as a minimum: • Heat Nr • Coil Nr • CPW Order Nr • Weight • Width • Thickness • Length • Grade • Supplier's name • Date of production
2. Coil Reception and Cross Welding	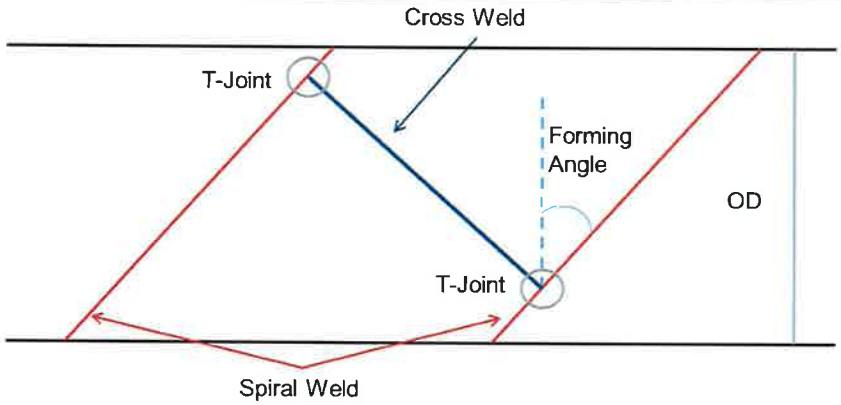 *Terminal DGT 1 - Coil feeding: Input of coil traceability data* *Relevant Procedure –CPW-HSJ-110.0: Raw Material- Receipt, Feeding, Control*

CORINTH PIPEWORKS S.A.

Process	Description
3. Edge Milling, Bending – Forming	<u>Edge Crimping</u> Equipment: 3 pairs of milling heads are used. 2 are straight cut and the last is corner cut. Purpose: (1) Creation of appropriate trimming *(edge milling)* of the coil edges in order to obtain the necessary profile (oxide-free cut) for welding. (2) Reduction of coil width to the exact size for forming. <u>Bending & Forming</u> Equipment: (1) 1 pair of wheels at each end of the coil. The wheels of each pair are internally and externally adjacent to the coil applying tension on the coil's vertical level. (2) Forming cage, where the coil is guided using the technique of three roller bending. The three rollers' axis is positioned parallel to the pipe's axis. Depending on the strip width/diameter ratio, the proper spiral angle is determined within a range between 45° and 80°. Forming angle (θo) = arcos [SW / (D-t)]: SW: strip width after edge cross section [mm] D: pipe outer diameter [mm] t: thickness [mm] 🕮 *Relevant Procedure – CPW-T-J-200.0: SAWH Forming and Tack Welding*
4. Tack Welding	Welding position: Internally Method: Gas Metal Arc Welding (GMAW) Shielding Gas: Carbon dioxide (CO2) Other parameters: welding speed, current, voltage, wire diameter, gas type and the flow rate Welding Speed: 4-9m/min Following tack-welding, the formed coil is cut to individual pipes of specified length by an automatic plasma cutting unit. The cutting unit is travelling parallel to the longitudinal axis of the pipe at the same speed while cuts the pipe to the desired length. 🕮 *Relevant Procedure – CPW-T-J-200.0: SAWH Forming and Tack Welding*

CORINTH PIPEWORKS S.A.

Process	Description
5. Pipe Identification	Individual pipes are automatically marked and identified with a controlled manner by assigning to each of them a unique pipe number. Type of pipe identification: Sxxx/y – a/b/c S: Symbol indicating SAWH Process Line xxx: Internal CPW's project serial number identifying the production of a specific diameter (3 digits) y: Process Sheet Sub-number (1 digit) a: Production serial number of the pipe. It indicates the number (sequence) of the pipe (1 to 4 digits) b: Run coil(s) number, indicating the number (sequence) of the coil from which the specific pipe has been produced linking the product with the supplier's Coil and Heat Nr. Run Coil Numbering starts from 1,2,3, etc and changes for each new coil produced for a specific Process Sheet Number, starting from 1,2,3, etc. (1 to 2 digits) c: Serial number of the pipe within the coil from which the specific pipe has been produced. This number starts from 1,2,3,etc and re-starts from 1 for the first pipe of each new Run Coil Number. (1 to 4 digits) 🕮 *Relevant Procedure – CPW-T-HSJCL-310.0: Traceability During Manufacturing And Coating of HFW, SAWH & SAWL Pipes*
6. SAW Welding	Welding Position: Inside & Outside Method: Submerged Arc Welding (SAW) Flux Description: Granular dust SAW parameters: Welding speed, current/voltage for each wire, number of wires, positioning of wires, angle of the wires, distances between the wires, nozzle stickout, wire diameter and type of wires and flux <u>Internal Welding</u> Welding head: Held in a defined position by an 18-meter long beam Spatial positioning control: Automatic by a weld seam tracking system. Number of welding wires: 1 to 3 wires depending on material thickness. <u>External Welding</u> Welding position: Half spiral turn after internal welding Number of welding wires: 1 to 2 wires depending on material thickness. 💻 *Terminal DGTs 2.1, 2, 3 – Offline welding: Input of inside and outside saw welding result* 🕮 *Relevant Procedure – CPW-T-J-220.0: SAWH Welding*

CORINTH PIPEWORKS S.A.

Process	Description
7. Initial Visual Inspection	At this stage the inside and outside weld seam is pre-inspected. *Terminal DGT 3 – Visual inspection: Input of initial weld seam visual inspection result*
8. Weld bead removal at pipe ends	Pipe end removal at pipe ends shall be: 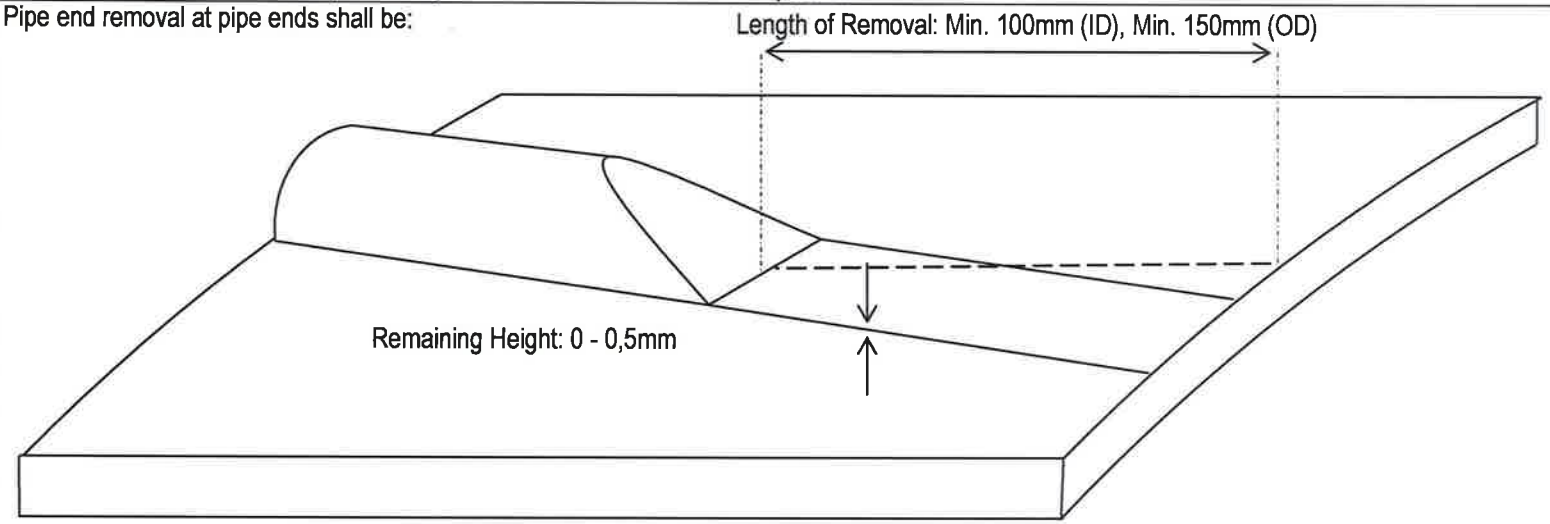
9. Hydrostatic Testing	Testing purpose: Ascertain the strength of the weld or detect any potential welding defects Testing frequency: All pipes (+ repaired pipes) Pressure calculation formula: $P = \frac{2\ S\ t}{D}$ Where: *S* is the hoop stress, expressed in megapascals, equal to 95% SMYS *t* is the minimum wall thickness, expressed in millimetres, *D* is the specified outside diameter, expressed in millimetres.

CORINTH PIPEWORKS S.A.

Process	Description

WT (mm)	Pressure (bar)
11	Min. 111
14,2	Min. 143
16	Min. 161
20	Min. 201

Testing Time: Min. 10 sec

Demonstration of test pressure: Digital recording unit and pressure gauges

Pipe positioning: The weld seam shall be positioned in a way that any pinhole leak or weeping is clearly visible.

Equipment characteristics

Equipment 1

Test pressure	5 – 32 MPa / 50 - 320 bar
Pre-selectable Pressure Holding Time	0 – 60 s
Maximum oil pressure	300 bar

Equipment 2

Test pressure	5 – 65 MPa / 50 - 650 bar
Pre-selectable Pressure Holding Time	0 – 60 s
Maximum oil pressure	330 bar

Terminal DGT 8 – Hydro testing: Input of hydraulic testing result

Relevant Procedure – CPW-T-SJ-140.0: Bevelling / Hydrostatic Testing

CORINTH PIPEWORKS S.A.

Process	Description
10. Sampling / Laboratory Testing	➢ Test rings are cut by plasma cutting from selected finished pipes according to the applicable test frequency. ➢ Rings are used for the preparation of specimens that are forwarded to the laboratory for testing. ➢ In order to maintain traceability, all specimens are identified throughout their preparation with the number of the pipe from which they were sectioned. ➢ The exact number, type, frequency of tests (or retests), the sample location and orientation as well as the acceptance criteria are according to the requirements of ITP_06_18_SAWH, latest revision.
11. Qualification of Personnel	According to the requirements of ITP_06_18_SAWH, latest revision.
12. Pipe Body Inspection for Laminar Imperfections	System: KRAUTKRAMER OPR INSPECTION Electronic evaluation system: UNIVIS Probe positioning: At the side of the pipe (3 o'clock) Probe holding: Oscillation of the probes at a direction parallel to the pipe axis along the pipe surface. Coupling medium: Water (constant supply, free of air bubbles) Pipe movement: Helical while passing under the inspection unit Pulse Repetition Frequency: 20kHz per channel Ultrasonic inspection technique: Pulse-echo type Signal layout: A-scan mode

Inspection	Detection	Probe			
		Type	Frequency (MHz)	Crystal Size (mm)	Angle(°)
Full Body UT	Laminar defects	GEMSEB4	4	3,5x10	0 twin

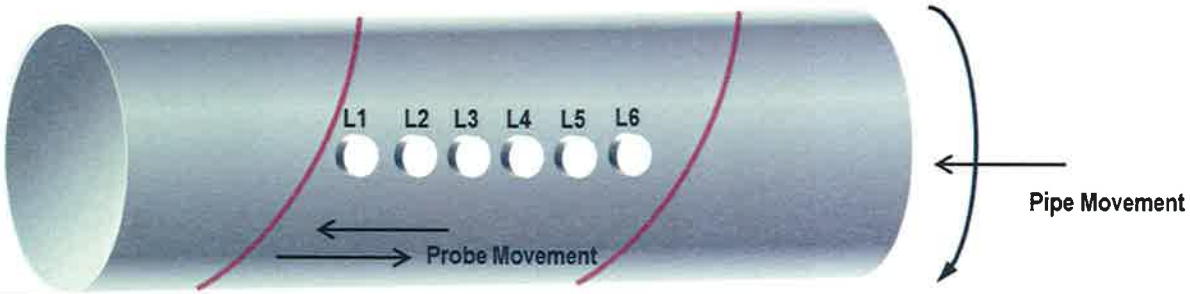

CORINTH PIPEWORKS S.A.

Process	Description

Configuration	Probe	Transmitter	Receiver	Inspection	Detection
Oscillating axis	L1	L1	L1	Pipe body	Laminar defects / Coupling
	L2	L2	L2		
	L3	L3	L3		
	L4	L4	L4		
	L5	L5	L5		
	L6	L6	L6		

Calibration block:

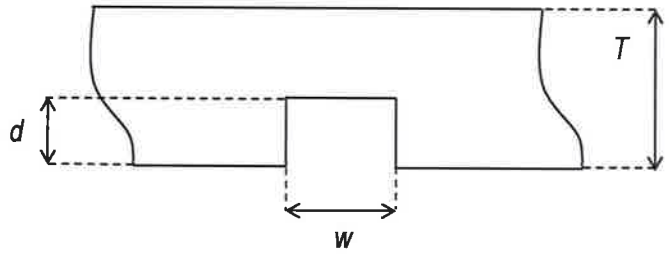

Diameter, w: 6.0mm, +10%, -0

Depth, T/4 < d < T/2, with a max of 10mm.
T: Nominal wall thickness

Terminal DGT 9.1 – Body UT: Input of body UT result
Terminal DGT 10 – Manual UT: Input manual UT result
Relevant Procedure – CPW-T-S-300.0: Ultrasonic Inspection

CORINTH PIPEWORKS S.A.

Process	Description
13. Final Automatic Weld Seam Ultrasonic (WSUT)	

Electronic evaluation system:	UNIVIS
Control system:	KRAUTKRAMER SNUP
Weld tracking:	Automatic system
Defect system and/or loss of coupling alarm:	Automatic audible and spray marking spraying system
Inspection results recording system:	Automatic
Coupling medium:	Water (constant supply, free of air bubbles)
Pulse repetition frequency:	20kHz per channel
Ultrasonic inspection technique:	Pulse-echo type
Signal layout:	A-scan mode (UNIVIS software)
Verification of untested ends	Two Ø 3mm drilled holes

Inspection	Detection	Probe			
		Type	Frequency (MHz)	Crystal Size (mm)	Angle(°)
Weld seam and HAZ	Longitudinal & transverse defects	GEW45Z4NB18	4	8x9	45
		GEW60Z4NB18	4	8x9	60
		GEW70Z4NB18	4	8x9	70

System configuration (Automatic weld seam Ultrasonic equipment):

Configuration	Probe	Transmitter	Receiver	Inspection	Detection
SNUP 1	LF3	LF3	LF3	Weld seam and HAZ	Longitudinal Defects
SNUP 1	LF4	LF4	LF4		
SNUP 1	LF3-LF4 (coupling)	LF3	LF4		
SNUP 1	KF5-KF6	KF5	KF6		Transverse Defects
SNUP 2*	LF7	LF7	LF7	Weld seam and HAZ	Longitudinal Defects
SNUP 2*	LF8	LF8	LF8		
SNUP 2*	LF7-LF8 (coupling)	LF7	LF8		
SNUP 2*	KF9-KF10	KF9	KF10		Transverse Defects

** Applied above 12,00mm wall thickness. The first configuration (SNUP 1) covers the lower part of the weld and the second one (SNUP 2) covers the upper part of the weld. The distances of the probes from the centre of the weld are set in a way that each configuration covers at least 1/2 of the weld thickness.*

CORINTH PIPEWORKS S.A.

Process	Description
	Calibration Block:

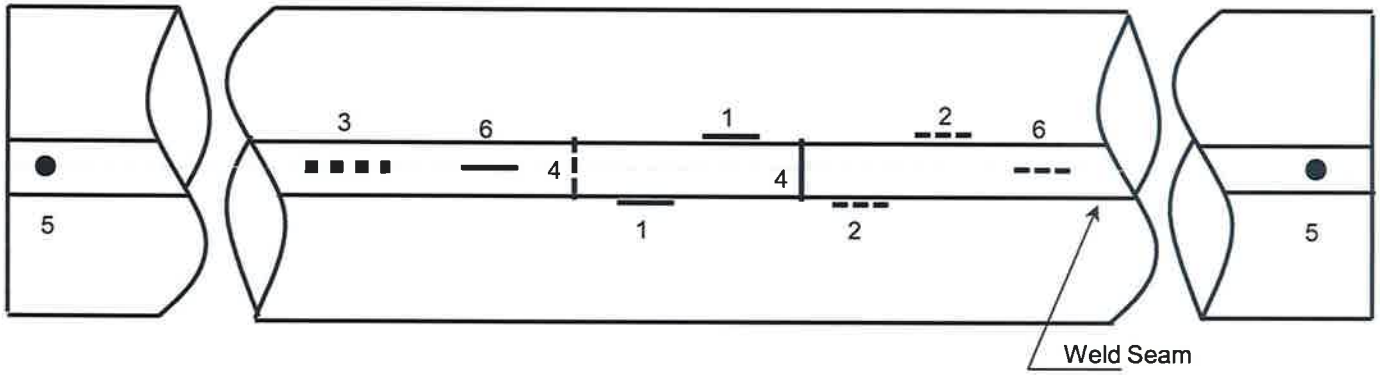

Position		Artificial Reflector				
		Type	Depth %	Max. Length (mm)	Max. Width (mm)	Diameter (mm)
Parallel to the weld seam on both sides	(1), (2)	N5	5	50	1,0	-
Along weld seam centreline	(6)	N5	5	50	1,0	-
Transverse to the weld	(4)	N5	5	50	1,0	-
At mid thickness of the weld	(3)	SDH	-	-	-	6
Weld centreline	(5)	RDH	-	-	-	3

Terminal DGT 9.2 – WSUT: Input of weld seam UT result

Relevant Procedure – CPW-T-S-300.0: Ultrasonic Inspection

CORINTH PIPEWORKS S.A.

Process	Description	
14. Manual Ultrasonic Inspection	Purpose:	- Inspection of each weld repair and start-stop - Evaluation of indications of the AWSUT (suspect areas) - Untested weld at pipe ends (area not covered by AUT due to equipment limitations) for at least 25mm in excess of the unexplored zone. - Pipe ends for L & T defects (50mm wide zone)
	Technique:	Pulse-echo
	Method (Acc. Criteria):	Weld seam inspection as per EN ISO 10893-11 (U2/U2H) Pipe ends inspection for L & T defects shall indicate no cracks.
	Coupling medium:	Gel form or water
	Terminal DGT 10 – Manual UT: Input manual UT result *Relevant Procedure – CPW-T-S-300.0: Ultrasonic Inspection*	
15. Radiographic Inspection of Weld Seam at Pipe Ends and Weld Repairs	Testing purpose:	Detection of defects *(such as cracks, lack of fusion, lack of penetration, inclusions, undercuts)* in the weld and the heat affected zone (HAZ).
	Equipment *(for pipe ends)*:	ERESCO 42 MF2 & 42 MF3 *(Power: 200kV, 10mA / Focal spot size: 3mm (1,5IEC) / Angle: 40° X 60°)*
	Equipment *(for weld repairs)*:	ISOVOLT XS 225M2 *(Power: 225kV, 7mA / Focal spot size: 0,4mm X 0,4mm / Angle : 40°)*
	Evaluation medium:	Fine-grain, high-contrast direct film with lead screen or Digital imaging medium (phosphor plate)
	Film / Plate overlap	At least 10mm
	Technique:	Single-Wall Single Image technique (S.W.S.I)
	Equipment:	GE CRXVision (with Rhythm RT/Review software) flatbed digitizer, with the ability to scan and process imaging plates.
	Imaging medium:	Highly flexible imaging phosphor plates (IPs)
	Image quality indicators:	Wire-type image quality indicators (IQIs) acc. ISO 19232-1 and duplex IQIs acc. ISO 19232-5. Essential wire diameter as per EN ISO 3183 Table M.11
	Verification of equipment:	CR system (including imaging plates and monitor) is validated on a weekly basis in accordance to EN 14784-1.
	Acc. Criteria:	As per EN ISO 3183 § M.7.5.6.4 & Table M.10
	Terminal DGT 11 – Ends X-Rays: Input of the radiographic inspection activity for the weld seam at pipe ends *Terminal DGT 12 – Fluoroscopy: Input of the fluoroscopic inspection result* *Terminal DGT 13 – Results X-Rays: Input of the radiographic inspection result for the weld seam at pipe ends* *Relevant Procedure – CPW-T-SJ-165.0: Radiographic and Fluoroscopic and Digital Radiographic Inspection*	

CORINTH PIPEWORKS S.A.

Process	Description
16. End Bevelling	Bevel Requirements: ➢ Smooth without any "curling" or other surface irregularities ➢ Both the external and the internal bevel angles shall be cleaned from burr. ➢ Bevel "root face" (w): 30° - 35° ➢ Bevel angle (*a*°): 1,6 mm (+0.8 mm, - 0.0 mm) 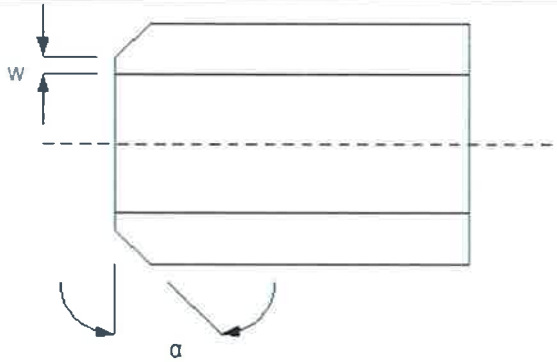 *Terminal DGT 21 – End Beveling: Input of end beveling result* *Relevant Procedure – CPW-T-SJ-140.0: Bevelling / Hydrostatic Testing*
17. Visual Inspection	The pipes are subjected to visual (internal and external surface) inspection acc. to the requirements of ITP_06_18_SAWH. *Terminal DGT 15 – Visual / Dimensional inspection: Input of the visual / dimensional inspection result and the pipe quality* *Relevant Procedure – CPW-T-S-170.0: Visual – Dimensional inspection*
18. Pipe Straightness	Measuring tool(s): Taut string and tape Measuring position(s): Min. 3 (Adjacent to weld, 90° and 180°) Out-Of-Straightness: Max. 0,2% of pipe length, measured as the maximum gap between the pipe and the taut string. Frequency: Measurement & Record: 1/10 pipes (min every 4 hours) 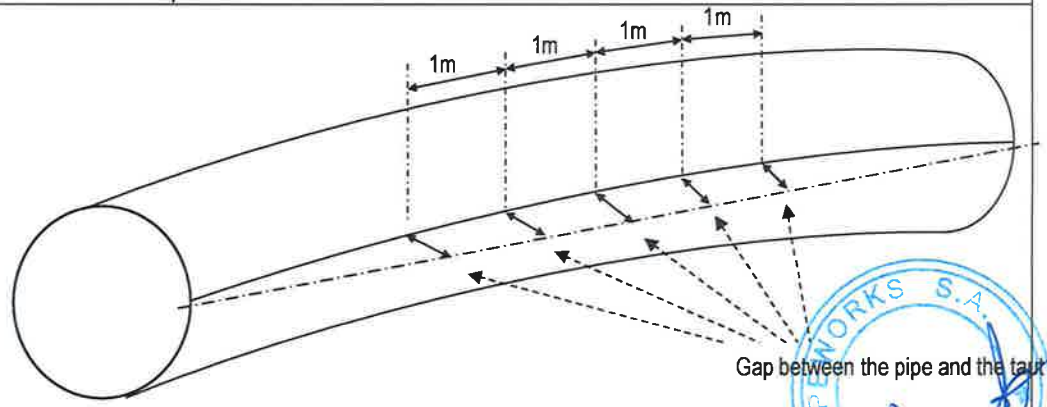 *Terminal DGT 15 – Visual / Dimensional inspection: Input of the visual / dimensional inspection result and the pipe quality* *Relevant Procedure – CPW-T-S-170.0: Visual – Dimensional inspection*

CORINTH PIPEWORKS S.A.

Process	Description
19. End Squareness	Measuring tool(s): End squareness tool or angle gauge Measuring position(s): At bevel face Out-Of-Squaress: Max. 0,005xD, but max. 1,6mm Frequency: Measurement & Record: 1/10 pipes (min every 4 hours) 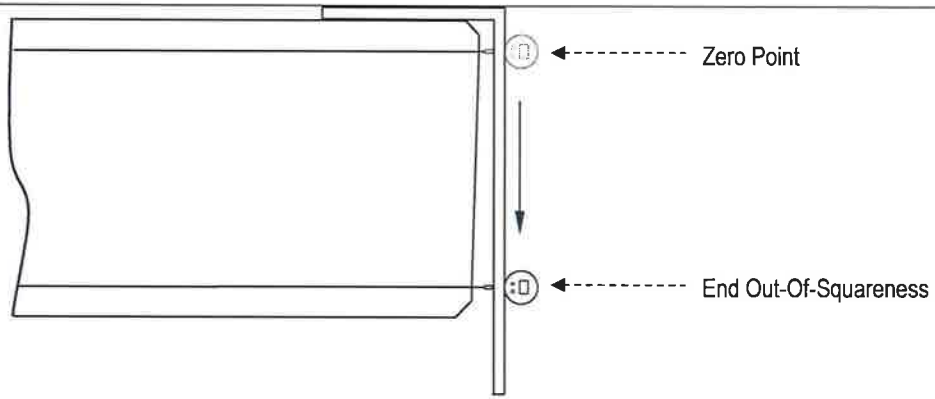 *Terminal DGT 15 – Visual / Dimensional inspection: Input of the visual / dimensional inspection result and the pipe quality* *Relevant Procedure – CPW-T-S-170.0: Visual – Dimensional inspection*
20. Weld Misalignment	Measurement: During macro examination Misalignment: max. 3 mm Frequency: 1 / shift 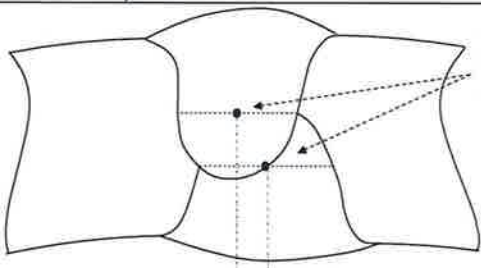 Midpoints of two parallel lines across the weld bead that are parallel to the tangent of the pipe surface and cross the intersections of the internal and external weld bead fusion lines Misalignment distance, which is the distance between the two midpoints but perpendicular to the tangent of the pipe surface

CORINTH PIPEWORKS S.A.

Process	Description
21. Radial Offset	Measuring tool(s): Weld gauge Tolerances: max. 0,1xWT Frequency: Measurement & Record: 1 / 10 pipes (min every 4 hours) or when visually detected 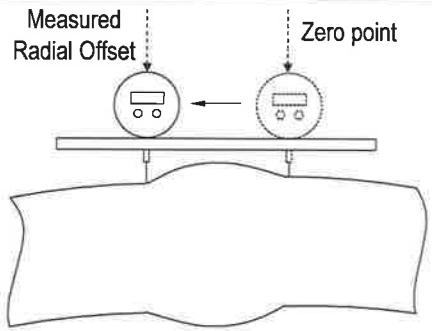 *Terminal DGT 15 – Visual / Dimensional inspection: Input of the visual / dimensional inspection result and the pipe quality* *Relevant Procedure – CPW-T-S-170.0: Visual – Dimensional inspection*
22. Weld Bead Height	Measuring tool(s): Weld gauge Tolerances: WT (mm) / Max. Internal / Max. External WT ≤ 15 / 3mm / 3mm WT ≥ 20 / 3mm / 4mm Frequency: Measurement & Record: 1/10 pipes (min every 4 hours) 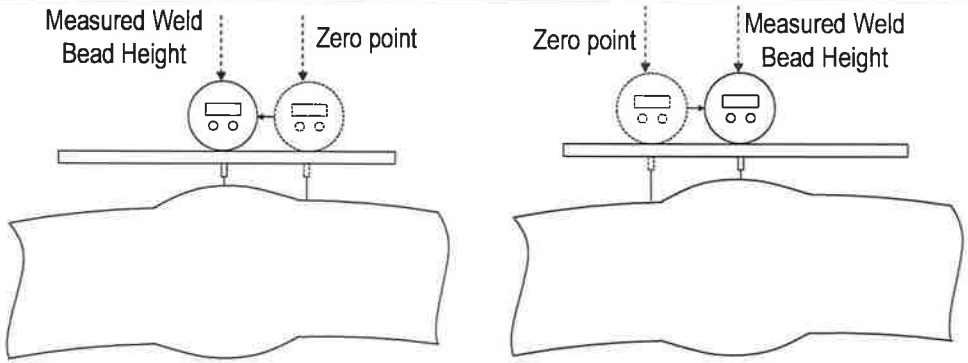 *Terminal DGT 15 – Visual / Dimensional inspection: Input of the visual / dimensional inspection result and the pipe quality* *Relevant Procedure – CPW-T-S-170.0: Visual – Dimensional inspection*

CORINTH PIPEWORKS S.A.

Process	Description
23. Wall Thickness	Measuring tool(s): Mechanical gage or UT thickness tester. Measuring Position(s): Adjacent to weld (1, 2). At 90° from weld (3) At 180° from weld (4) Tolerances: WT (mm) / Tolerance 10 < WT < 15 / -5% / +10% 15 ≤ WT < 20 / -5% / +1,5mm WT ≥ 20 / -1,0mm / +1,5mm Frequency: Measurement: Each pipe Record: 1 / 10 pipes (min every 4 hours) 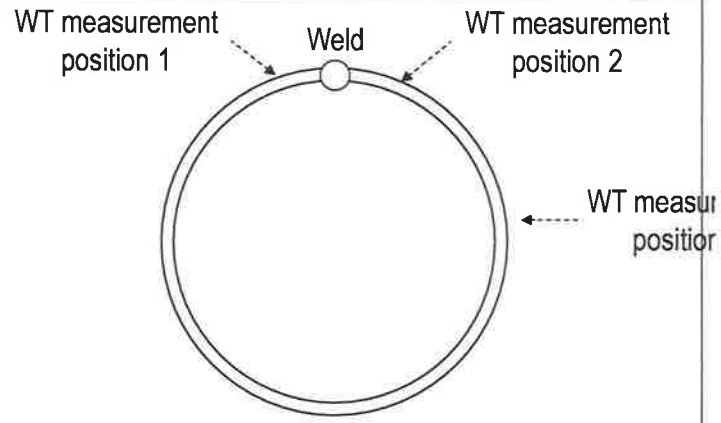 *Terminal DGT 15 – Visual / Dimensional inspection: Input of the visual / dimensional inspection result and the pipe quality* *Relevant Procedure – CPW-T-S-170.0: Visual – Dimensional inspection*
24. Diameter	Tolerances: Ends (ID): ±1,2mm Body (OD): ±0,005D, but max. ±4mm Frequency: Ends: Measurement & Record: Each pipe end Body: Measurement & Record: 1/10 pipes (min every 4 hours) Terminal DGT 15 – Visual / Dimensional inspection: Input of the visual / dimensional inspection result and the pipe quality *Relevant Procedure – CPW-T-S-170.0: Visual – Dimensional inspection*

CORINTH PIPEWORKS S.A.

Process	Description
25. Out-Of-Roundness	Measuring Position(s): At min. 4 positions equally spaced along pipe circumference. Tolerances: Ends: max. 4mm Body: max. 0,015D, but max. 15mm (for D/T≤75) Frequency: Ends: Measurement & Record: Each pipe end Body: Measurement & Record: 1/10 pipes (min every 4 hours) 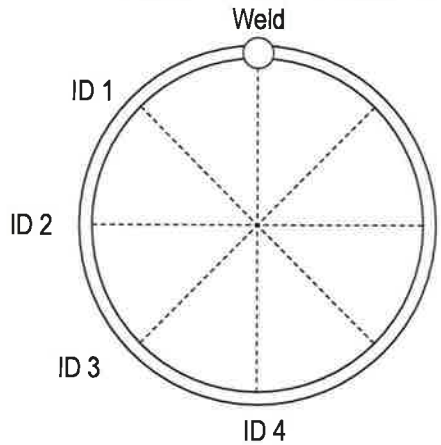 *Terminal DGT 15 – Visual / Dimensional inspection: Input of the visual / dimensional inspection result and the pipe quality* *Relevant Procedure – CPW-T-S-170.0: Visual – Dimensional inspection*
26. Weld Peaking at Pipe Ends	Measuring tool(s): Template, oriented transverse to the pipe axis and has a length of 200 mm. Tolerances: Max. 1,5 mm Frequency: Measurement & Record: Each pipe, both ends 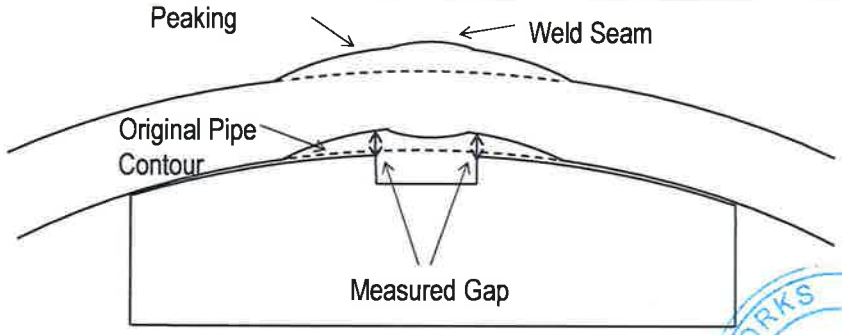 *Terminal DGT 15 – Visual / Dimensional inspection: Input of the visual / dimensional inspection result and the pipe quality* *Relevant Procedure – CPW-T-S-170.0: Visual – Dimensional inspection*

CORINTH PIPEWORKS S.A.

Process	Description
27. Residual Magnetism	Measuring tool(s): Hall-effect gaussmeter Measuring Position(s) 4 reading, app. 90° apart at each pipe end Tolerances: Max. 30 Gauss Frequency: Measurement & Record: 1/10 pipes (min every 4 hours) *Terminal DGT 15 – Visual / Dimensional inspection: Input of the visual / dimensional inspection result and the pipe quality* *Relevant Procedure – CPW-T-S-170.0: Visual – Dimensional inspection*
28. Treatment of Surface Defects by Grinding	➢ All dressable surface defects shall be dressed out by grinding. ➢ The grinding shall be carried out in such a way that the dressed area blends smoothly with the contour of the pipe. ➢ Complete removal of defects shall be verified by local visual inspection. ➢ To be acceptable, the wall thickness in the ground area is measured to verify that is within the thickness tolerances and the complete defect removal shall be ensured.
29. Treatment of Surface Defects by Repair Welding	Welding Procress: manual Shielded Metal Arc Welding (SMAW) Position: Horizontal - PA (Flat) / 1G No of Passes: Multiple with single electrodes Inspection: Hydrostatic test and NDE (UT and/or X-Ray examination) 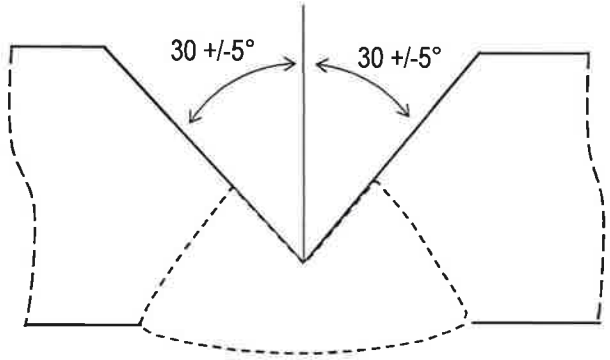 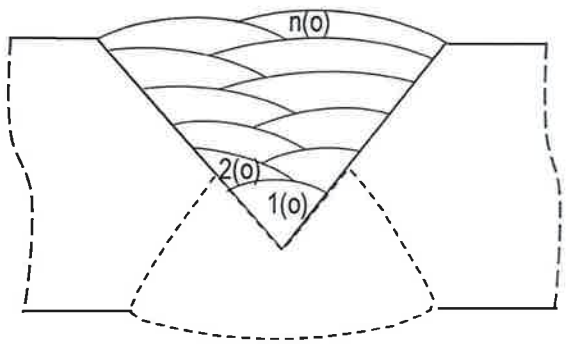 *Terminal DGT 4 – Ends cut: Input of the pipe ends cut activity* *Terminal DGT 6 – Repairs: Input of the weld seam repair or grinding activity* *Relevant Procedure – CPW-T-SJ-225.0: Repairs*

CORINTH PIPEWORKS S.A.

Process	Description
30. Tallying / Marking	➢ The length and the weight of each pipe are automatically measured and both values are recorded in a computer database. ➢ At the end of production a *Tally Sheet* is printed that contains the following information for each individual pipe: 1. Pipe number, 2. Heat number, 3. Length ,and 4. Weight. ➢ Additionally, total quantity (pieces, total length and weight) of production are given. ➢ All pipes, which have successfully passed all inspections and controls, are marked according to ITP_06_18_SAWH, latest revision. ➢ The final marking of the pipes to be coated should be performed after external and/or internal coating application. 🖳 *Terminal DGT 17 – Tallying: Input of pipe final length and weight*

CORINTH PIPEWORKS S.A.

CORINTH PIPEWORKS	QUALITY DEPARTMENT	PAGE 1/33
	THISVI PLANT	

TITLE	MANUFACTURING PROCEDURE SPECIFICATION – PE COATING
DOCUMENT No.	MPS_01_18_PE
REVISION No.	0
PRODUCTION LINE	TCP48/TCP100
CUSTOMER	ICGB INTERCONNECTOR
PROJECT	INTERCONNECTOR GREECE-BULGARIA

SIZE / GRADE /QUANTITY

Pos. No	OD (in)	WT (mm)	Grade PSL2	Type	Lengths	Purpose	FBE thickness	Adhesive thickness	PE thickness	Lining	Quantity (m)
1	32	11	L450ME	SAWH	12m /18 m	Line	350μm	150μm	3.000μm	75μm	91.084
2	32	11	L450ME	SAWL	12m	Cold bend	350μm	150μm	3.000μm	75μm	13.345
3	32	14,2	L450ME	SAWH	12m/18 m	Line	350μm	150μm	3.000μm	75μm	43.591
4	32	14,2	L450ME	SAWL	12m	Cold bend	350μm	150μm	3.000μm	75μm	8.935
5	32	16	L450ME	SAWH	12m/18 m	Line	350μm	150μm	3.000μm	75μm	20.416
6	32	16	L450ME	SAWL	12m	Cold bend	350μm	150μm	3.000μm	75μm	3.593
7	32	20	L450ME	SAWL	12m	Line	350μm	150μm	3.000μm	75μm	5.271
8	32	20	L450ME	SAWL	12m	Cold bend	350μm	150μm	3.000μm	75μm	1.017
9	32	11	L450ME	SAWH	12m	Emergency stock	350μm	150μm	3.000μm	75μm	216
10	32	14,2	L450ME	SAWH	12m	Emergency stock	350μm	150μm	3.000μm	75μm	96
11	32	16	L450ME	SAWH	12m	Emergency stock	350μm	150μm	3.000μm	75μm	60
12	32	20	L450ME	SAWL	12m	Emergency stock	350μm	150μm	3.000μm	75μm	24

PRELIMINARY

	ISSUED	APPROVED	CUSTOMER APPROVED
DATE	16/01/2018	17/01/2018	
NAME	K. NTOULAS COATING & LINING QC MANAGER	N. VOUDOURIS QUALITY DIRECTOR	
SIGNATURE			

CORINTH PIPEWORKS S.A.

1. SCOPE

The present *Manufacturing Procedure Specification (MPS)* describes the basic manufacturing steps as well as quality control activities which are involved with the production and inspection of **Factory Applied Three Layer Extruded Polyethylene (PE) coating** for the "**Interconnector Greece-Bulgaria**" Project in accordance to Project Specification 10760-SPC-CP-P0-002 Rev.4 and ISO 21809-1:2011. All inspection details such as testing frequency and acceptance limits are analytically described in the relevant project specific Inspection and Test Plan (ITP) latest revision.

Figure 1 presents a process flow chart of the coating plant for 3LPE:

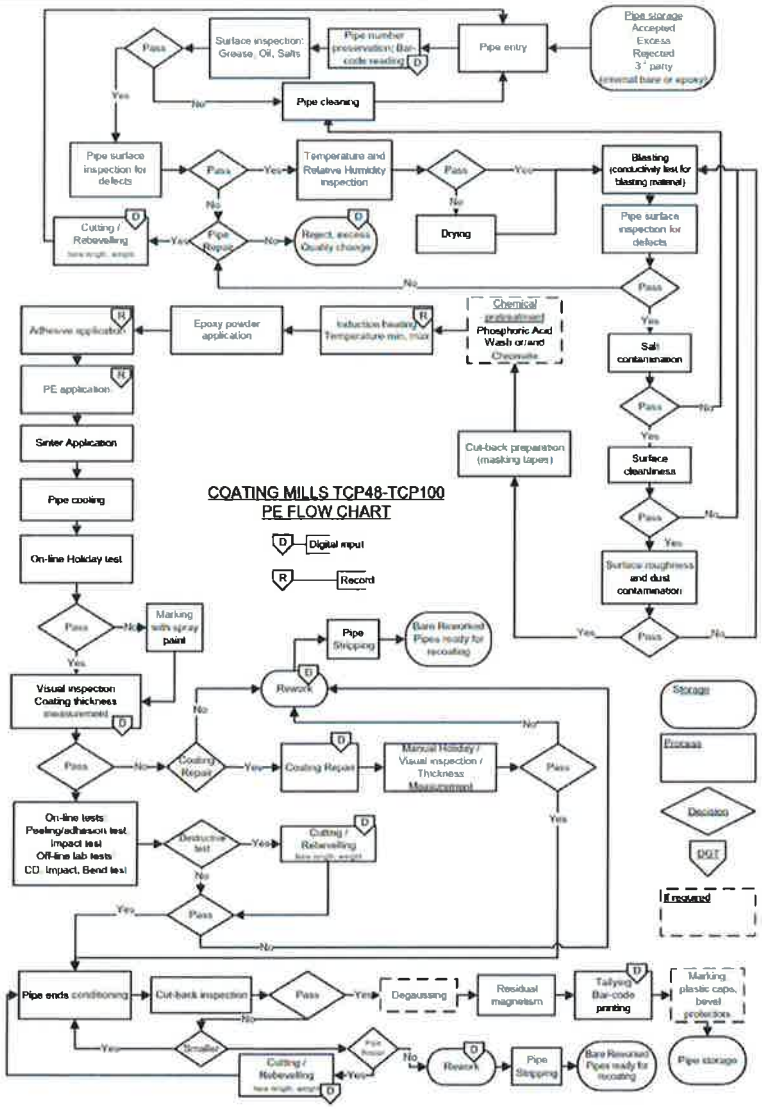

Figure 1: Process flow chart of the coating plant for 3LPE

CORINTH PIPEWORKS S.A.

2. COATING MATERIALS

2.1 Composition/requirements of the coating system

The coating system shall consist of three layers:

- 1st layer: epoxy (Fusion Bonded Epoxy)
- 2nd layer: Adhesive
- 3rd layer: PE top layer (HDPE)

All materials to be used are selected from acknowledged and approved by Corinth Pipeworks suppliers and are compatible with each other for the formation of the three-layer system. Materials to be used shall be according to the specific project requirements.

2.2 Batch certificate

Coating materials to be delivered to CPW are accompanied by the relevant batch certificates issued by the coating materials manufacturer. The batch certificate shall state test methods, acceptance. The Quality Control Manager of the Coating mill reviews the material batch certificates and considering the results of the receiving inspection, verifies that the material properties are in accordance with the project requirements.

2.3 Storage and handling of coating materials

Upon delivery, storage and handling of coating materials shall be as per manufacturer's recommendations. The personnel responsible for receiving inspection shall check the following:

- The packing is in good condition.
- The material bears a label with the code name of the material, supplier's name, batch number and other data, which help identify the material.
- During the summer months, the epoxy powder must arrive in the plant in air-conditioned containers. Upon delivery the epoxy powder is immediately stored in the company's air-conditioned storage chambers.

Samples from the delivered materials shall be taken by Quality Control personnel to perform the relevant receiving inspection tests.In case where during receiving inspection one of the above requirements is not met, the materials with the identified problem shall be marked and unloaded at a designated area. The Coating Quality Control manager shall be notified accordingly to assess whether a Non-Conformance should be issued.

3. PROCEDURE QUALIFICATION TRIAL (PQT)

3.1 General

A procedure qualification trial, PQT, shall be carried out in accordance with the following paragraph to verify the capability of the coating application procedure, coating materials, tools/equipment and personnel to produce pipeline coating with the required properties.

3.2 Procedure qualification trial

All items in the relevant Inspection and Test Plan, from surface preparation to preparation of pipe ends shall be performed and inspected/tested. The specific process parameters shall be selected to be used during the PQT so that the suitability of the ranges and combinations specified in the ITP can be verified (e.g. a maximum value for one parameter may be applied in combination with a minimum value for another, if deemed critical).

CORINTH PIPEWORKS

Requirements for the frequency of testing and inspection, methods and acceptance criteria are contained in Project Specification 10760-SPC-CP-P0-002 Rev.4 and ISO 21809-1:2011, and are included in the Appendix Bof relevant project specific ITP latest revision.

The results from the PQT shall be documented in a report, including the process parameters used and the coating material certificates.

4. APPLICATION OF THE COATING SYSTEM

4.1 Preliminary inspection

At the entry of the coating mill the pipes are high pressure water washed and then fed onto the skids of the external shot blaster section, where the following preliminary pipe inspections and actions take place:

- Pipe number preservation.
- Barcode reading (Appendix A).
- Sealing of pipe ends with suitable protective plugs to avoid internal deterioration of pipes during blasting and protect the bevels.
- Pipe surface visual inspection for dents, laps, defective bevels and any other defects. Defective pipe shall be marked for future identification and damage report shall be sent for client notification.
- The pipe surface is visually checked for contamination with oil or grease. If contaminated pipes are detected they are send for cleaning according to SSPC SP-1 standard.
- Ambient conditions (air temperature, relative humidity) and the steel surface temperature are measured and compared with the Dew Point. Pipe temperature shall be 3°C higher than Dew Point. The relative humidity shall be less than 85%. In case that moisture is present on the pipe surface or the pipe temperature is too low, LPG burners are used for moisture removal and pre-heating of the pipe before blasting.

4.2 Surface preparation / inspection

The exterior pipe surface is subjected to abrasive cleaning using dry blasting techniques

The following inspections are taking place after blasting in accordance to Project Specification 10760-SPC-CP-P0-002 Rev.4 and ISO 21809-1:2011:

- The conductivity of abrasive material shall be less than 60mS/cm according to ASTM D4940.
- The height of the surface profile attained shall be within 50μm and 100μm, as measured in accordance with the requirements of ISO 8503-4.
- Before coating, the pipe surface is cleaned from dust, residues of abrasive process and foreign matter using clean dry compressed air free of oil. The blasted surface is checked according to ISO 8502-3 for dust contamination (size and quantity) with class 2 or better. If contamination or dust is observed, the pipe shall be reprocessed.
- The cleanliness of the surface of each pipe shall be a minimum of Sa 2 ½ (near-white metal) according to ISO 8501-1.
- The salt contamination level is checked using SCM400 salt contamination meter and shall be less than 20mg/m^2.
- Systematic visual inspection of the clean surface is also performed. Slight surface imperfections (e.g. slivers, laminations, scratches etc), can be removed by superficial grinding provided that the final surface has a smooth contour and the remaining wall thickness, is within the acceptable tolerances. Anchor

pattern shall be restored on grinding areas greater than 100mm diameter or more to the cleanliness and roughness specified above.

Following surface preparation, the surface being coated shall not be exposed for a length of time that can result in flash rust and under no circumstance shall the time be more than 4 h.

4.3 Induction heating

Each pipe is subjected to *Induction Heating* at the temperature range recommended by the powder supplier (maximum pipe temperature 260°C). Uniform heating of the pipe is performed with the use of medium frequency, high power induction coil(s). Temperature is continuously monitored by optical pyrometer and recorded. Temperature is also checked with Tempilstick three times per shift minimum.

4.4 Coating application

Immediately after heating, each pipe passes through the spraying booth where the fluidized epoxy powder (1st layer) is applied onto the heated pipe surface with the use of electrostatic spraying guns. The number, position and deposition rate of nozzles, as well as travel speed are properly set to give the desired dry film and gel time.

Immediately after application of the FBE layer, pipes are wrapped through side extruders with the adhesive material (2nd layer) and the polyethylene coating (3rd layer). Adhesive material shall be applied within the FBE suppliers' recommended time and temperature. The extrusion temperatures of the adhesive and the PE material are recorded every 1 hour minimum. The extrusion temperature for the adhesive and for the PE is set based on coating materials data sheets and communication with our suppliers.

The degree of overlap of the two layers is controlled in such a manner in order to provide the desired total thickness of the three-layer system (3.5 mm minimum). The thickness of the FBE layer shall be 350μm min. The thickness of adhesive layer shall be 150μm min.

After coating application, pipes are controlled cooled by water spray down to temperature suitable for handling and testing.

Full traceability of the batch numbers of the materials used is maintained as the batch number of each material fed for consumption is recorded together with the time of feeding on the "*Materials Consumption Sheet*" issued every shift (Appendix A).

4.5 Cutback preparation

Coating material is easily removed from both pipe ends with the use of masking tapes, allowing for a cutback area with a smooth finish to the pipe surface (feathering) according to the requirements of the relevant project specific Inspection and Test Plan. The required PE cutback length shall be measured from the root face of the pipe to the beginning of the coating bevel and shall be 190mm. The polyolefin shall be beveled to an angle 30° max measured in the direction of the pipe axis. The FBE protrusion shall be 15mm.

CORINTH PIPEWORKS S.A.

5. INSPECTION AND TESTING

5.1 General

Inspection and testing shall be carried out in accordance with this MPS, and relevant project specific ITP latest revision, and meet the requirements Project Specification 10760-SPC-CP-P0-002 Rev.4 and ISO 21809-1:2011.

5.2 Holiday Detection

Each coated pipe is subjected to an automatic *holiday test* for the detection of any discontinuities or pores on the coated surface. The test voltage (maximum 25kV) is applied through a wire or plastic brush. Voltage is checked at least two times per shift using an accurate high-voltage meter. The system covers the entire coated body of pipes and is equipped with an audible and visual alarm. Areas where defects detected are automatically marked (true position marking) with white paint. The suspect areas are then evaluated by portable apparatus and repaired. In case were the defect size or the number of defects detected does not allow for repairs according to the applicable specification, the pipe is sent for rework.

5.3 Thickness Measurement

After the coating application, the coating thickness of every pipe is measured according to ISO 2808 on four positions at 3, 6, 9, 12 o'clock around the pipe at twelve locations uniformly spaced over the length and circumference of the pipe (pipe end and middle of pipe). If any of these 12 readings is below the minimum coating thickness, shall be carried out an additional four readings around this area. The average of the additional four readings and the initial reading shall be higher than the minimum thickness.

Thickness measurements are performed with the Electrophysik Minitest 4100 device based on the magnetic induction principle. At least once per shift the thickness measurement device is calibrated using standard plastic shims ±20% of the thickness being measured (ISO 21809-1:2011 Annex A). The surface roughness and cleanliness of the plates shall be representative of the production pipe.

NOTE: When measuring thicknesses of more than 1 mm, the surface roughness of the pipe is not relevant (ISO 21809-1:2011 Annex A).

5.4 Visual inspection of coated pipes

Each coated pipe is visually inspected for the detection of any surface defects such as irregularities, scratches, pinholes, blisters etc. Coating shall be uniform color and gloss without any surface defects or damages. Light water marks due to quenching are acceptable.

5.5 Test on coated pipes

The following tests are performed within the coating mill or at the in-house laboratory:

Peeling Resistance Test is performed in CPW coating mill (Appendix B),
Impact resistance test is performed in CPW coating mill (Appendix C),
Degree of epoxy cure is performed in CPW laboratory (Appendix D),
Indentation resistance test is performed in CPW laboratory (Appendix E),
Elongation test is performed in CPW laboratory (Appendix H),
Cathodic disbondment test is performed in CPW laboratory (Appendix F),
In process degradation of PE is performed in CPW laboratory (Appendix I),
Flexibility test is performed in CPW laboratory (Appendix G).

CORINTH PIPEWORKS S.A.

The exact number, type and frequency of tests as well as acceptance criteria shall be according to the relevant project specific ITP latest revision, Project Specification 10760-SPC-CP-P0-002 Rev.4 and ISO 21809-1:2011.

5.6 Retesting

Pipes that fail to meet the requirements of surface preparation in accordance to the relevant Inspection and Testing Plan latest revision shall not be coated until the cause has been identified and corrected. Pipes that have been coated since the last acceptable test shall be accepted if they meet the relevant requirements.

Pipes that fail to meet the testing requirements of the relevant Inspection and Testing Plan latest revision, shall be retested for the parameter(s) found to be out of the specifications. If the retest also fails to meet the requirements, two pipes in the coating sequence prior to the pipe that failed and two pipes in the sequence after that pipe shall be retested.

If the results of all retested pipes are satisfactory, the coating shall be considered acceptable on all pipes except the pipe that failed. If any of the retests also fail, the total production back to the last test passed shall be blocked and further testing shall be initiated and agreed with the customer. In the case of confirmed failure, the coating shall be rejected.

6. REPAIR / REWORK

Pipes with unsatisfactory coating or excessive coating damages are sent for rework (stripping and re-coating. The maximum area of any individual repair shall be limited to 10cm^2 with maximum 1 repair per m^2.

Repair material to be used shall be compatible with the original coating and it shall be applied according to supplier's recommendations and procedures.

Repaired areas are always subjected to adhesion test (edge lifting method), thickness measurement and holiday test at 25kV. Each repair is recorded on the relevant repair report issued every shift.

7. MARKING

All pipes, which have successfully passed all inspections and controls, are marked according to the requirements of the relevant project specific ITP latest revision.

8. HANDLING / STORING

Coated pipe shall be handled in a manner that avoids damage to the pipe, pipe ends and coating. At the exit of the mill, pipes are lifted by cranes using specially padded hooks not to damage the bevel face; they are loaded on tracks and transported to the storage area. Alternative the pipes can be handled by forklifts with protected forks.

Pipe that is damaged during processing or after the holiday inspection shall be repaired in accordance with § 6.

9. FINAL DOCUMENTATION

For the final product shall be issued a mill test certificate in accordance to ISO 10204 / 3.1.

CORINTH PIPEWORKS S.A.

APPENDIX A
TRACEABILITY OF PIPES AND COATING MATERIALS

A.1. SCOPE

The scope of this chapter is to describe the tracking system that is used by Corinth Pipeworks to ensure full traceability of pipes and coating materials during coating activities of ICGB project. Traceability of test specimens for coating is also mentioned.

A.2. PIPE IDENTIFICATION PRIOR TO COATING

After quality control inspection of produced bare pipes, their information including pipe number, OD, wall thickness, grade, length, weight and heat number is entered to the SAP system of Corinth Pipeworks. Thereafter, for each pipe a magnetic barcode label with pipe number information is printed for better handling and tracking purposes. This label is placed on the internal surface of one pipe end of each pipe by the quality control personnel of the pipe mill.

A.3. TRACEABILITY SYSTEM AT COATING MILL

A.3.1 COATING ENTRANCE

Each pipe that it is entering in the coating mill is barcode scanned by the pipe handling operator. This operation is managed by a special level II software named *Pipecoating* that communicates directly with SAP ERP (**Figure 5**). At the SAP the status of pipes that have been entered in the coating plan changes to *Coating In Progress*. The operator is also checking that the pipe number is legibly written in the internal surface of the pipes.

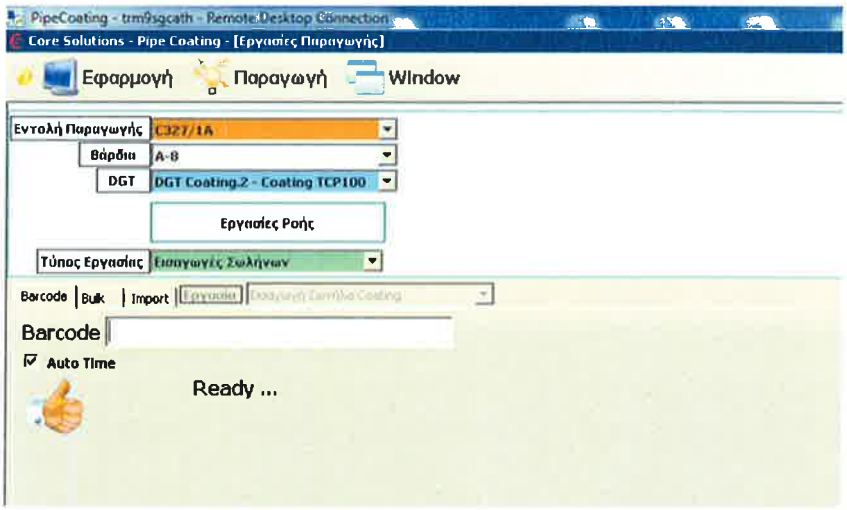

Figure 5: CPW *Pipecoating* level II software

CORINTH PIPEWORKS S.A.

A.3.2 EXTERNAL PIPE BLASTING

Pipes that pass the external blasting operation are transferred to the bare inspection station for quality control inspections according to relevant ITP. Pipes with acceptable inspection results are again barcode scanned by the quality control inspector and are released for coating. The barcode label is removed from pipes to be coated. Pipes that do not meet the inspection requirements are returned to coating entrance in order to be re-processed.

A.3.3 INDUCTION HEATING

After external blasting the pipes' sequence is recorded by barcode reading. With the use of a pipe sensor prior to pipe temperature monitoring, is also achieved the real time correlation of measuring temperature to each individual pipe. The pipe pre-heating temperature is continuous monitored by two optical pyrometers before and after FBE application. Corinth Pipeworks S.A. has developed a special temperature control program in order to manage the data of both pyrometers and induction coil(s), keeping separate records for each pipe (**Figure 6**).

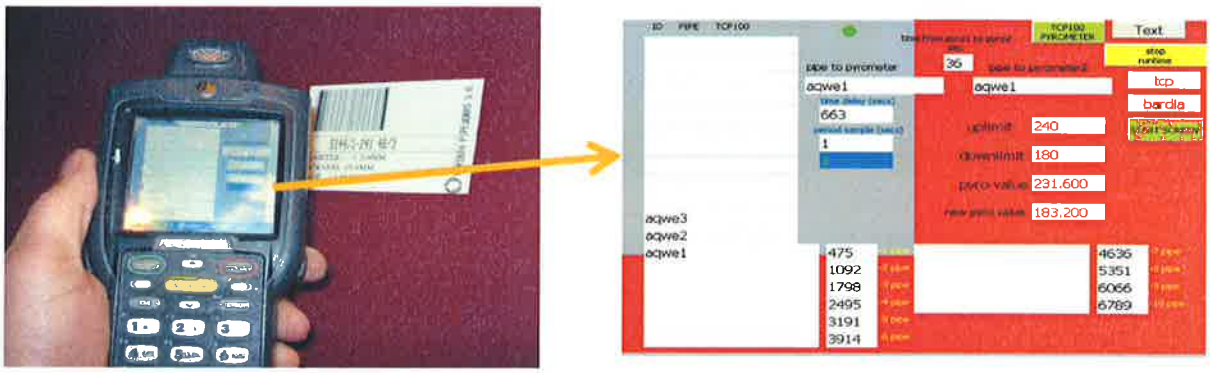

Figure 6: Barcode reading and temperature control program for optical pyrometers

A.3.4 COATING

A.3.4.1 IDENTIFICATION OF COATING MATERIALS

During coating material receipt the quality control of the yard is controlling the identification marking of each package according to §2.3. The packages with missing or incorrect information are marked and transferred at a separate designated area for further investigation.

Coating material information including material type, batch number and weight is entered to SAP ERP system by warehouse manager.

A.3.4.2 CONSUMPTION OF COATING MATERIALS

The operator that feeds the coating materials in the silos for consumption keeps records of them (hard copy) in the Consumption Report of Coating Materials, issued per shift. The records include the type of consumed material, batch number, weight, time and date of consumption. This information is also electronically recorded in the *Pipecoating* software (**Figure 7**).

CORINTH PIPEWORKS S.A.

The correlation of consumed coating materials to each individual pipe is performed using the same system that is used for tracking the pre-heating temperature of pipes but taking in to consideration a time delay equal to the time that is needed for each coating material to travel from the silo to the pipe.

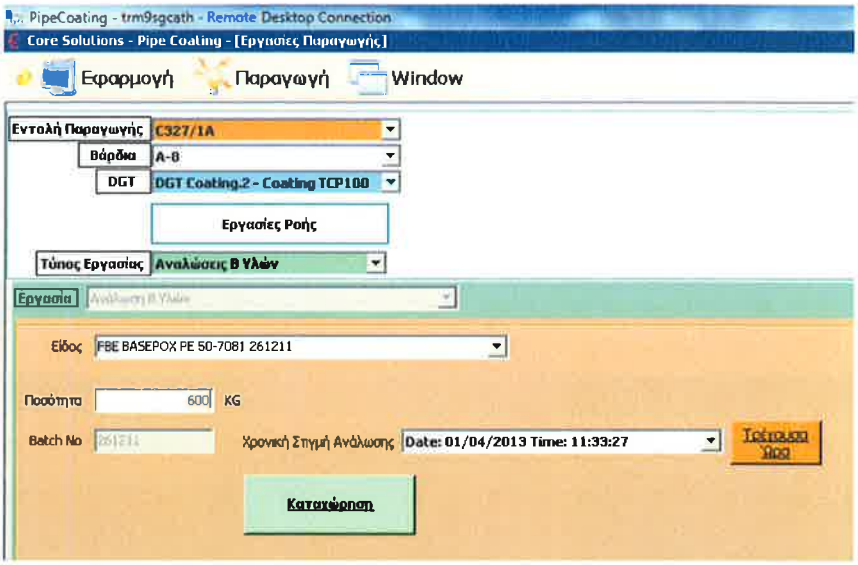

Figure 7: Coating material consumption screen of *Pipecoating* software

A.3.4.3 IDENTIFICATION AND TRACKING OF SAMPLES FOR COATING TESTING

Each sample that is extracted from a coated pipe for testing is identification marked by quality control personnel. The marking on samples includes as a minimum the pipe number, coating process sheet number, shift and date of coating (**Figure 8**). Quality control inspector keeps full hard records of testing information in the Coating Inspection and Test Report that is issued per shift. Sampling information is also entered to *Pipecoating* software in order to maintain tracking of samples during testing.

The coated pipes are released for shipment per production shift according to the test results. When all tests are completed with acceptable results (according to the relevant ITP) and the respective testing per production shift are released, the quality status of coated pipes in the SAP system changes to Accepted by the quality control manager.

Figure 8: Sample's marking on coated pipe for destructive testing

A.3.4.4 TRACKING OF PIPES THAT NEEDS COATING REPAIR OR STRIPPING

The pipes that have to be repaired or stripped are recorded in the Coating Repair/Rework Report and also in the *Pipecoating* software. Coated pipes that need repair or stripping are transferred and temporarily stored at separate designated areas.

A.3.5 COATING EXIT

The pipes before leaving the coating plant shall bear all the required external identification marking (according to the relevant ITP) and at least the pipe ID in order to maintain the traceability during the internal coating operations. At the exit of the coating plant the operator keeps hard records of the pipes that leaving and also enters them to the *Pipecoating* software. New magnetic barcode label is also printed and placed in the internal surface of each pipe (one pipe end).

CORINTH PIPEWORKS S.A.

APPENDIX B
PEEL STRENGTH TEST

B.1 General

The test shall consist of measuring the force required for peeling the coating from the metal substrate of the pipe at a constant rate of pull.

B.2 Equipment

- Tensile testing machine, capable of recording the peel force with a 5 % reading accuracy,that operates at rate of pull of 10 mm/min, as shown in (**Figure 9**).
- Cutting tool.

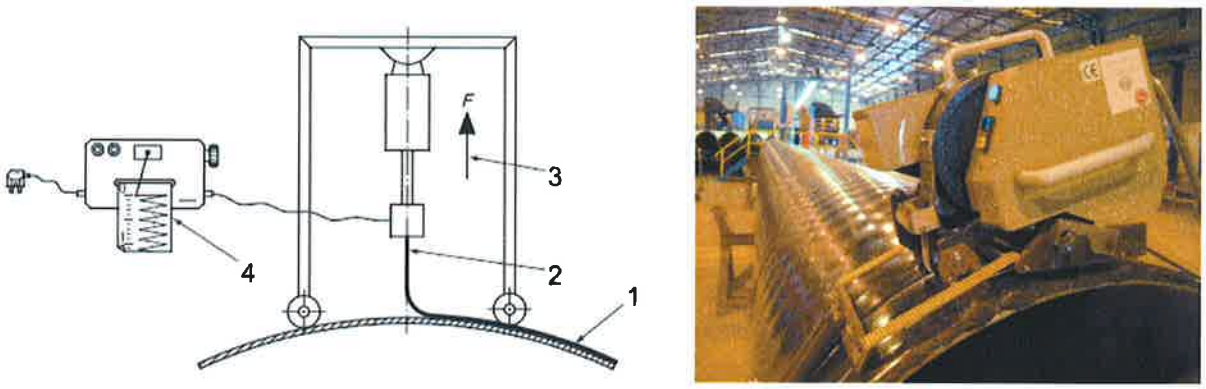

Figure 9: Peel strength test equipment (*COESFELD*)

B.3 Procedure

- The coating thickness may be reduced to the minimum thickness of the coating class to facilitate peel testing.
- The peel test shall be performed at the temperatures specified in the relevant Inspection and Testing Plan latest revision.
- The temperature shall be measured by means of an adapted probe on the external surface of the pipe at the root of the peeled strip.
- Temperature tolerance shall be ±5°C.
- The peel force shall be graphically recorded over 140 mm using a constant peeling speed of 10 mm/min.
- The pipe shall be supported during the test to prevent movement.
- A sample coating strip shall be cut in the circumferential direction of the pipe, measuring a minimum of 160 mm long and 20 mm to 50 mm wide.
- The cut end of the coating strip shall be secured to one of the gripping jaws of the testing machine and peeled perpendicular to the pipe axis.

CORINTH PIPEWORKS S.A.

B.4 Results

The results shall be calculated by dividing the peel force data for 140 mm of peeling into seven intervals of 20 mm, discarding the first and last intervals. The peel strength shall be calculated from the remaining data.

The average peel strength shall be the arithmetic mean over the 100 mm length. If this value is not automatically determined, the arithmetic mean may be estimated from the 20 mm bands across the 100 mm length.

The average peel strength shall meet the requirements of the the relevant Inspection and Testing Plan latest revision.

CORINTH PIPEWORKS S.A.

APPENDIX C
IMPACT RESISTANCE TEST

C.1 GENERAL

The test shall consist of verifying the strength of the coating by the impact of a punch of defined shape falling directly onto the coating from a specified height and temperature. The test shall be carried out on pipes or cut samples according to ISO 21809-1:2011.

C.2 EQUIPMENT

Drop-weight testing machine, consisting of the following:

- Straight guide made of steel of inside diameter 40 mm, 1.50m long, containing a smooth and even inside surface. Provide the guide with:
  - support and levelling devices,
  - attached ruler, which makes it possible to determine the drop height to an accuracy of 5mm minimum.
- Hard steel punch, with a hemispherical head, free from notches, porosity or other surface irregularities and with a diameter of 25mm ± 1%.
- A small metal rod of 9mm in diameter perpendicular to the flat face of the head and in its center, where this rod shall be long enough to hold the additional weights required for the tests. Equip the punch with a suitable system for raising it to the required height; the mass of the assembly shall be appropriate to the energy being checked and shall be accurate ± 2%.
- Weights, formed by metal discs with an outside diameter fitting the internal diameter of the straight guide and incorporating a central hole of a suitable diameter; the mass of each disc shall be accurate to ± 2%.

C.3 PROCEDURE

- A holiday detection test shall be carried out prior to the impact test to identify the defective points and avoid making the impact at these locations.
- The test shall be carried out at a temperature 23°C ± 3°C.
- The coated pipe or pipe sample shall be placed on a rigid and stable horizontal support.
- For each point of impact, the drop-weight testing machine shall be installed perpendicular to the coating surface so that the loaded punch can fall freely without friction or resistance. Ten impacts shall be carried out, allowing the weight corresponding to the specified energy to fall from the required height. The points of impact shall be selected to avoid any protruding welds. Furthermore, the distance from the points of impact to the end of the pipe shall be at least 1,5D (when testing on pipe) and at least 50mm apart between the axes of the impacts.
- The holiday detection test shall be performed at each impact trace.
- The hard steel punch shall be checked every 30 impacts. If damaged, it shall be replaced.

C.4 RESULTS

If no holidays are recorded on any of the ten impacts, the impact results are accepted.

CORINTH PIPEWORKS S.A.

APPENDIX D
THERMAL ANALYSIS OF EPOXY AND CURED EPOXY COATING FILMS

D.1 SCOPE

The present procedure describes the necessary steps to be followed for thermal analysis, which is used to characterize the uncured epoxy and the cured coating film.

The test shall be performed using Differential Scanning Calorimetry (DSC), in accordance with ISO 21809-1:2011 Annex D.

D.2 EQUIPMENT

a) Differential scanning calorimeter (DSC), with cooling accessory.
b) Balance, accurate to 0,1mg.
c) Sample-encapsulating press.
d) Aluminum pans, with covers.
e) Nitrogen gas supply, dry, analytical grade.

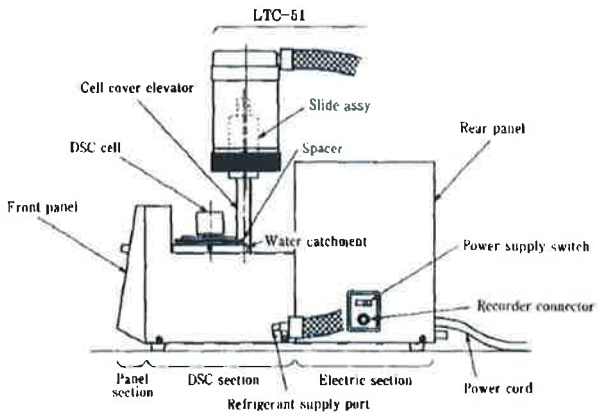

Figure 10: Differential scanning calorimeter (DSC)

D.3 PROCEDURE

The test procedure that the operator must follow for evaluation of coating materials shall be as follows:
a) Place a 10 ± 3 mg sample of epoxy powder or coating, into a pre-weighed aluminum pan.
b) Crimp the cover into the place with the encapsulating press.
c) Weigh the sample.
d) Determine the sample mass to an accuracy of 0,1mg.
e) Place the sample and the reference sample in the DSC cell and purge with dry, nitrogen gas.

D.4 MEASUREMENT

For the epoxy powder, the following heating cycles must be performed, starting with run (a) as the conditioning run.
For cured epoxy film, the following heat cycles must be performed, starting with run (b).

CORINTH PIPEWORKS S.A.

-Run (a): Heat the sample from 25°C ± 5°C to 75°C ± 5°C (FBE powder) or 110°C ± 5°C (cured film) at a rate of 20°C/min and hold for 1,5 minute. Then cool the sample to 25°C ± 5°C.
-Run (b): Heat the sample from 25°C ± 5°C to 275°C ± 5°C at a rate of 20°C/min and then cool the sample to 25°C ± 5°C. Hold for 3 minutes at 25°C ± 5°C.
-Run (c): Heat the sample from 25°C ± 5°C to T_g + 40°C (typically 150°C) at a rate of 20 °C/min, then cool the sample to 25 °C ± 5 °C.

For certain epoxies, different heating cycles can be necessary according to the instructions of the epoxy manufacturer.

D.5 EVALUATION OF TEST RESULTS

D.5.1 Epoxy powder

D.5.1.1 Glass transition temperature

The glass transition temperature, T_g, is calculated at the point of inflection intersection (**Figure 11**). By evaluating run (b), the T_g of the uncured powder obtained is equal to T_{g1}. By evaluating run (c), the T_g of the cured material (powder) obtained is equal to T_{g2}.

D.5.1.2 Heat of reaction of the epoxy

The exothermic heat of reaction, ΔH, is obtained by integrating the exothermic peak of the DSC scan.

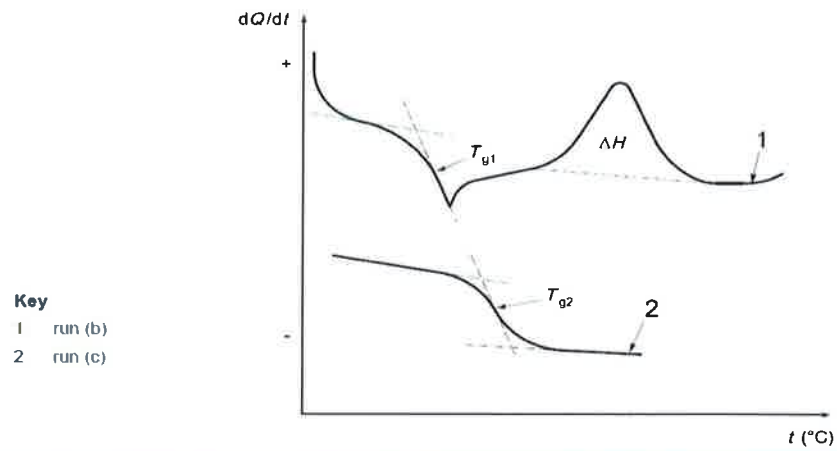

Figure 11: Examples of thermal scans on epoxy powder

D.5.2 Cured epoxy film

D.5.2.1 Glass transition temperature

The glass transition temperature, T_g, is calculated in the same way for the epoxy for run (b) and run (c) in **Figure 12**, where T_{g3} is T_g of run (b) and T_{g4} is T_g of run (c), all expressed in degrees Celcius.

For coatings, ΔT_g is determined, which is the change in T_g value by using the equation (1) and the T_g values defined in the first paragraph.

$\Delta T_g = T_{g4} - T_{g3}$ (1)

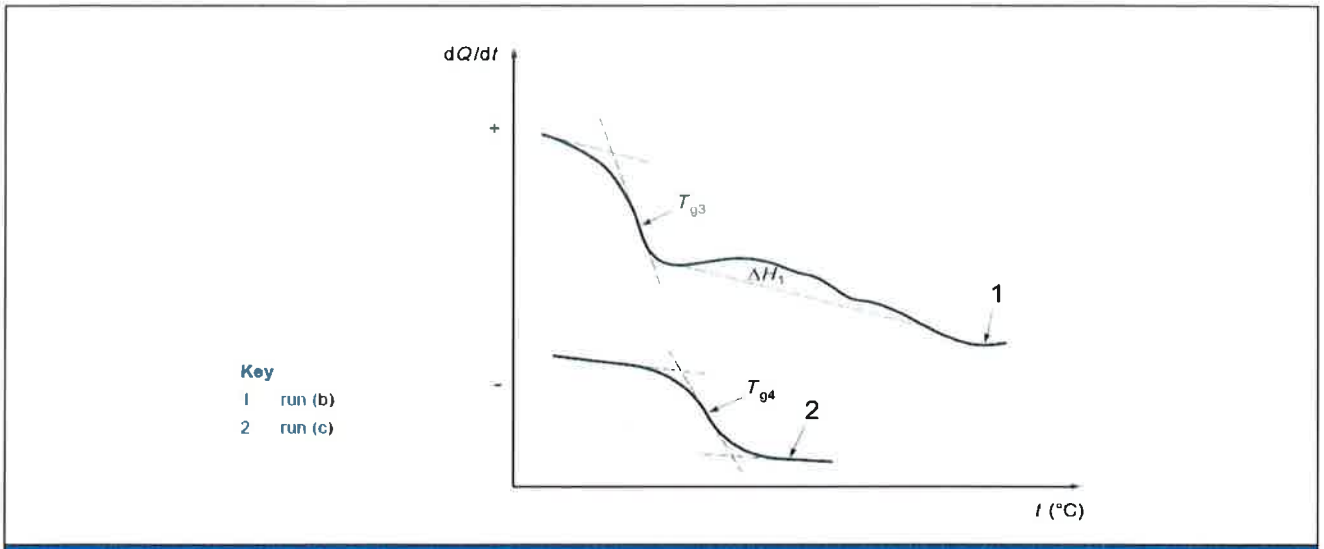

Figure 12: Examples of thermal scans on cured film

D.5.2.2 Residual heat of reaction of cured film

The exothermic heat of reaction, ΔH_1, shall be obtained by integrating the exothermic peak of the DSC scan run (b) in **Figure 12**.

In a fully cured coating film, no residual heat of reaction should be observed.

The degree of conversion, *C*, expressed as a percentage, can be calculated as given in Equation (3):

$$C = \frac{(\Delta H - \Delta H_1)}{\Delta H} \times 100 \quad (3)$$

Where,
ΔH is the exothermic heat of reaction of the powder; run (b)
ΔH_1 is the exothermic heat of reaction of the cured film; run (b)

D.6 REPORTS

The information recorded to the DSC test report shall be:
a) The batch number of the FBE.
b) The date of testing.
c) The pipe number.
d) The process sheet number.
e) Temperatures (Tg1 and Tg2, in °C).
f) The enthalpy (ΔH).

D.7 TECHNICAL DATA OF EQUIPMENT

D.7.1 DSC EQUIPMENT

CORINTH PIPEWORKS S.A.

Manufacturer: SHIMADZU
Model: DSC-50
Number of devices: 3
Heating rate: (1-50)°C/min
Temperature range: Ambient to 725°C
Atmosphere: Inert gas flow (nitrogen), (20-50) mL/min
Measurement heat flow range: ±0,01 to ±100,0 mW

D.7.2 PRECISION SCALE

Model: ADP 210L
Scale: (0-200)g
Precision: ±0.001g
Calibration certificate: Issued by Metrocal Calibration Laboratory in accordance with ISO/IEC 17025.

CORINTH PIPEWORKS S.A.

APPENDIX E
INDENTATION RESISTANCE TEST

E.1 SCOPE

The present procedure describes the necessary steps to be followed for measuring the indentation of a punch load into the coating under fixed conditions of temperature and load. The test shall be performed in accordance with ISO 21809-1:2011 Annex F.

E.2 EQUIPMENT

a) Chamber, inside ventilated or a circulated bath, thermostatically controlled to ± 2°C
b) Penetrometer (**Figure 13**), comprised of
b.1) A cylindrical indenter with a diameter of 1,8 mm ± 0,05 mm, with a cross-sectional area of 2,5 mm^2, on the top of which is mounted a weight. The assembly (indenter plus weight) shall produce a force of 25 ± 0,5 N
b.2) A dial gauge
b.3) Another measurement system accurate to ± 0,01 mm.

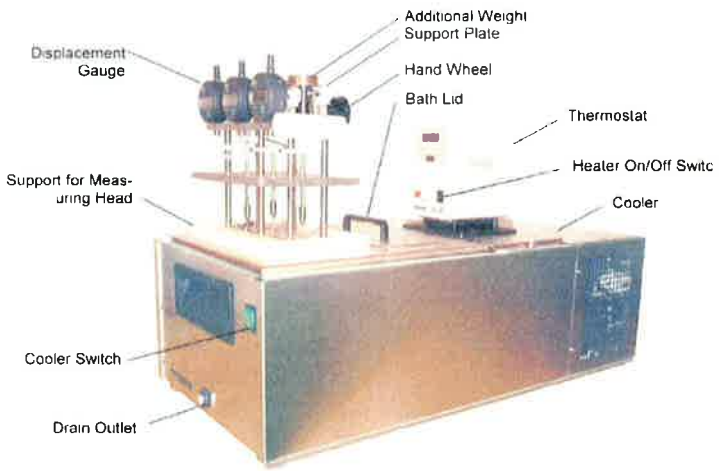

Figure 13: Penetrometer

E.3 PROCEDURE

The test shall be performed three times on a coupon cut from the pipe or on strips on polyolefin removed from the pipe surface.

The bath can be filled with deionized water by opening of the measuring head. The water level should be approximately 3cm below the top cover. The test specimen shall be held within the penetrometer assembly, in the thermostatically controlled chamber and set to the set temperature.

When the testing temperature on the thermostat is reached, the operator places the three segments of the coated pipe under the holder of the measuring head with the penetrators in up position. The segment may not exceed a total height of 11mm and must not overhang the base plate. Then, the penetrators of the measuring head are

lowered carefully and left for 1 hour the measuring head containing the samples into the chamber. After 1h, the readings on the dial gauge shall be recorded by the operator.

The measuring head (indenter) shall be loaded with the mass of 2.5 kg in total into the equipment. A test duration of 24h shall be used, unless otherwise specified. After this testing period, the readings of the dial gauge shall be recorded by the operator.

E.4 PENETRATOR ADJUSTMENT

Before each test due to possibly different testing temperature ranges, the thermometer measurements must be checked out and adjusted if needed.

For the adjustment of the temperature for each test, the operator shall follow the steps below:

a) With a calibrated thermometer (±0,5°C) measure the temperature in the water bath.
b) Calculate the difference between the thermometer and the thermostat readings.
(The temperature difference is negative, if the thermometer's reading is greater than apparatus and positive in the opposite case)
c) After pressing the menu button **3** a justified **"C"** appears on the display (**5**), (**Figure 14**)
Using the knobs (**7**) [(↓) or (↑)] insert the value of the calculated difference (positive or negative – step b).
d) By pressing of the button (**8**) set the calculated value in the calculator memory.

The adjustment of the "C"- set temperature must be prepared before using of another test temperature. The new value is not saved until the Enter (8) button has been pressed, because the calculator continues to use the old set value.

E.5 ADJUSTING THE MICROMETERS

The micrometers must be checked every six months by relevant standard micrometers.

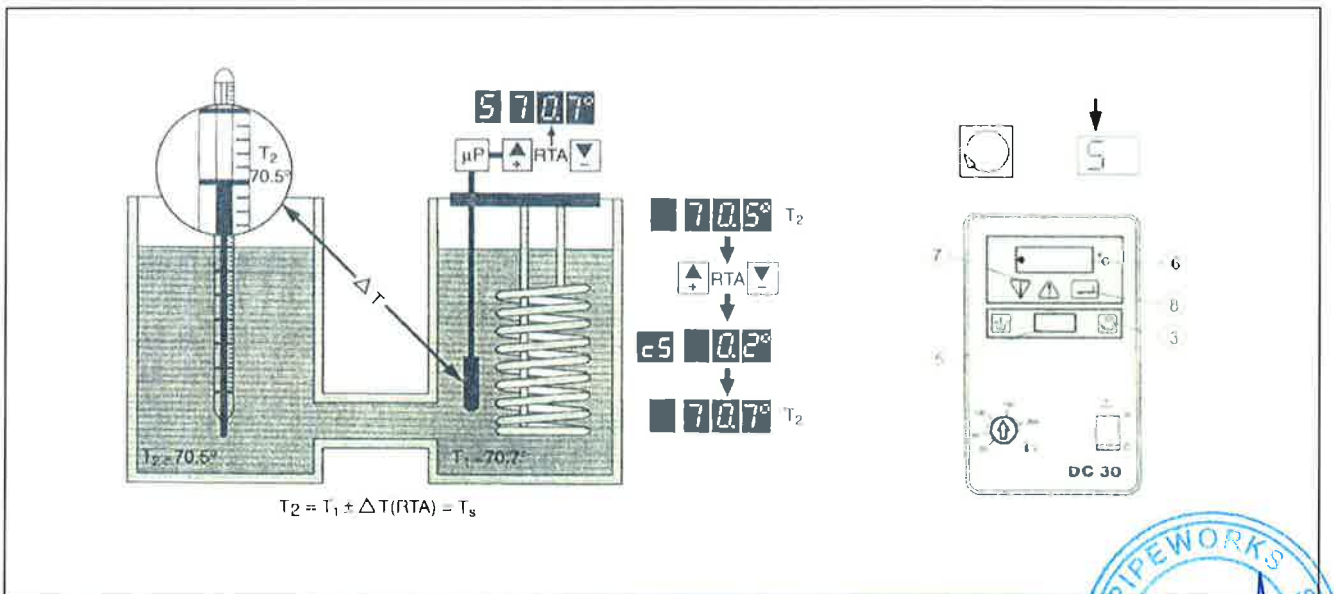

Figure 14: Measurement of "C" (left) / Thermostat adjustment (right)

E.6 REPORTS

The information recorded to the CPW-T-C-180.3.0.1 test report shall be:
a) The organic coating batch number and thickness.
b) Applied weight (g).
c) The date of testing.
d) The indentation depth (mm).
e) The testing temperature (°C).
f) The testing period (hours, h).

E.7 TECHNICAL DATA OF EQUIPMENT

E.7.1 PENETRATION RESISTANCE UNIT

Manufacturer: COESFELD
Number of devices: 3
Temperature range: Ambient up to 120°C
Additional information: 3 positions per unit for simultaneous testing
Calibration certificate: Issued by Metrocal Calibration Laboratory in accordance with ISO/IEC 17025.

CORINTH PIPEWORKS S.A.

APPENDIX F
CATHODIC DISBONDMENT TEST

F.1 SCOPE

The present procedure, prepared in accordance with ISO 21809-1:2011 Annex H, describes the necessary steps to be followed for assessing the resistance to disbondment of damage to the coating of pipes when exposed to cathodic polarization. The test shall be performed on test specimens taken from the coated components previously subjected to holiday detection, in which an artificial defect of a defined size has been drilled.

F.2 EQUIPMENT

a) Rectified d.c. power supply (COESFELD), with controlled voltage output.
b) Oven (THERMAWATT), controllable to within 3°C.
c) Calomel reference electrode (SCHOTT).
d) Wire electrode, platinum, 0,8 mm to 1,0 mm.
e) Plastic cylinder, 75 mm ± 3 mm internal diameter.
f) Sodium chloride solution, 3% in distilled water.
g) Utility knife (STANLEY FatMax).
h) Drill bit, 6 mm.

Figure 16: Rectified dc power supply (left) / Oven (right)

CORINTH PIPEWORKS S.A.

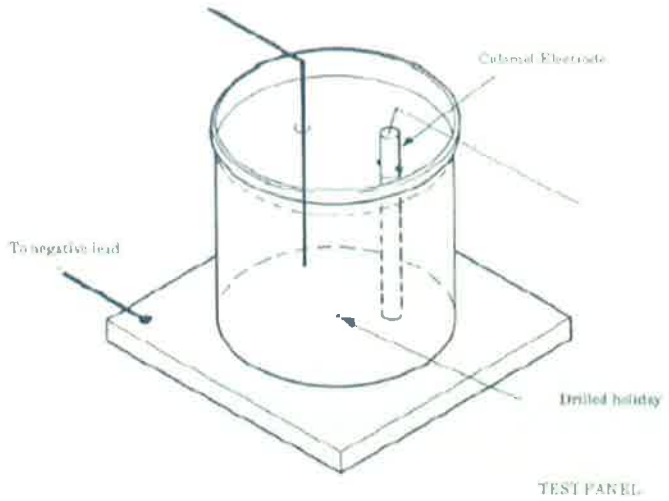

Figure 17: Calomel reference electrode and Platinum wire

F.3 SPECIMENS

Test specimens from pipe rings shall be approximately 100mm x 100mm x the pipe wall thickness.

F.4 PROCEDURE

Only test specimens that are confirmed to be holiday free with a holiday detector set at a minimum of 1800V shall be used.

A 6 mm diameter holiday is drilled in the centre of the test specimen through the coating to expose the steel substrate (**Figure 18**).

Centre the plastic cylinder over the holiday and apply a sealant to form a water–resistant seal.

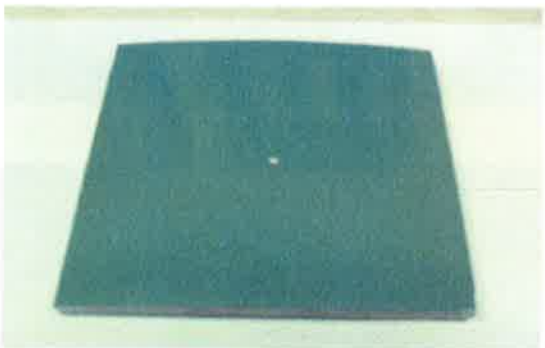

Figure 18: 6mm diameter holiday in the centre of the test specimen

CORINTH PIPEWORKS

The cylinder (with minimum ID 75mm) shall be filled to a height of at least 70 mm with the solution preheated to testing temperature. The solution level shall be marked on the cylinder. Then, the electrode inserted into the solution is connected to the positive wire from the dc power supply. The negative wire from the dc power supply is attached to a bare spot prepared on the test specimen (**Figure 17**). Voltage calibration of Metrix AX 502 and Wenking MCP 2 d.c power supply devices is performed with the use of Transmation Madel 1045 standard instrument.

Voltage (negative with respect to the calomel reference electrode) is applied to the test specimen and constant temperature is maintained under the test conditions specified to the relevant ITP.

Maintain the solution level by the addition of distilled water as required. The operator shall record, at least once in a shift, the current, pH, voltage, temperature and the solution level in order to maintain the testing conditions constant. The above mentioned shall be recorded to the cathodic disbondment test conditions record CPW-T-C-180.8.2.

Upon test completion, the test cell is dismantled, the specimen air cooled to 20±3°C, and the cathodic disbondment characteristics of the test specimen evaluated within 1h of removal of heat.

Using a special utility knife, make 6 to 12 radial cuts through the coating to the substrate. Such cuts shall extend at least 20 mm from the center of the holiday.

The tip of the blade of the utility knife is inserted under the coating at the holiday. Using a levering action, chip off the coating. Continue until the coating demonstrates a definite resistance to the levering action.

The disbonded distance from the edge of the original holiday is measured along each radial cut and the average of the measured values is calculated. The results are denoted at CPW-T-C-180.8.1 test report. Disbondment radius is recorded when it is greater than 1 mm. Otherwise, disbondment radius is recorded as <1mm.

F.5 REPORTS

The information recorded to the CPW-T-C-180.8.1 form shall be:
a) The epoxy powder batch number
b) The date of testing
c) The average disbondment value in millimeters
d) The test condition
e) The testing standard

F.6 TECHNICAL DATA OF EQUIPMENT

F.6.1 DC POWER SUPPLY DEVICES

a) Manufacturer: COESFELD
Type: MPC4
Number of devices: 5
Max Voltage: 2.0V (4 devices) and 3.5V (1 device)
Total simultaneous testing equipment: 4x4=16 (up to 1.5V) and 1x3=3 (up to 3.5V)
Calibration certificate: Issued by Metrocal Calibration Laboratory in accordance with ISO/IEC 17025.

b) Type: Metrix AX 502

CORINTH PIPEWORKS S.A.

Number of devices: 1
Max Voltage: 3.5 V
Total simultaneous testing equipment: 2
Calibration certificate: Issued by Metrocal Calibration Laboratory in accordance with ISO/IEC 17025.

F.6.2 OVENS

a) Manufacturer: THERMAWATT
Model: TG210L
Number of ovens: 2
Temperature range: *50-350°C*
Calibration certificate: Issued by Metrocal Calibration Laboratory in accordance with ISO/IEC 17025.

b) Manufacturer: THERMAWATT
Model: TG104
Number of ovens: 1
Temperature range: *50-250°C*
Calibration certificate: Issued by Metrocal Calibration Laboratory in accordance with ISO/IEC 17025.

F.6.3 UTILITY KNIFE

Manufacturer: STANLEY
Model: FatMax

CORINTH PIPEWORKS S.A.

APPENDIX G
FLEXIBILITY TEST

G.1 SCOPE

The present procedure describes the necessary steps to be followed for assessing the flexibility of three-layer polyolefin coatings, applied to a bare steel substrate. The test shall be performed in accordance with ISO 21809-1:2011 Annex I.

G.2 EQUIPMENT

a) A hydraulic press
b) Bending mandrels with fixed radii
c) A freezer
d) Electric timing device, capable of measuring 0,1s intervals
e) Thermometer

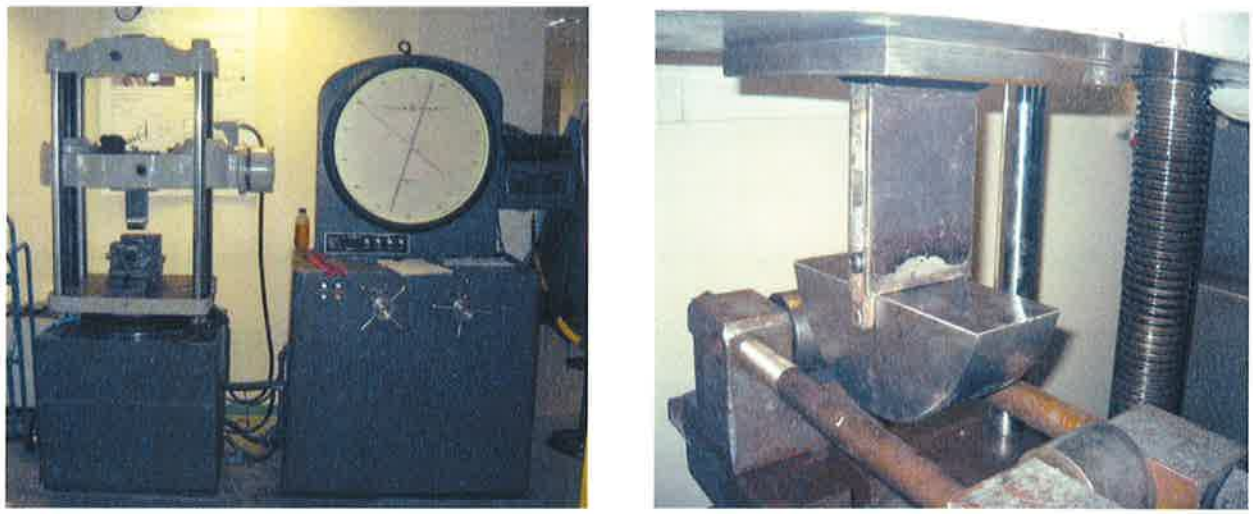

Figure 19: Hydraulic press (left) / Bending mandrel with fixed radii (right)

Figure 20: Freezer

CORINTH PIPEWORKS

G.3 SPECIMENS

Test specimens are cold cut from a pipe ring with a minimum length of 200mm parallel to the axis of the pipe. The width shall be approximately 25mm.

G.4 PROCEDURE

The coating on the edge of the test sample shall be smoothed to remove any potential stress risers.

The test specimen is then placed in the freezer, cooled to -2°C and 0°C (or any other temperature specified), and held at that temperature for a minimum of 1h.

The effective sample thickness, *d*, which includes the actual sample thickness and any curvature, shall be determined by placing the specimen on a flat surface and measuring the effective thickness shown in **Figure 21**.

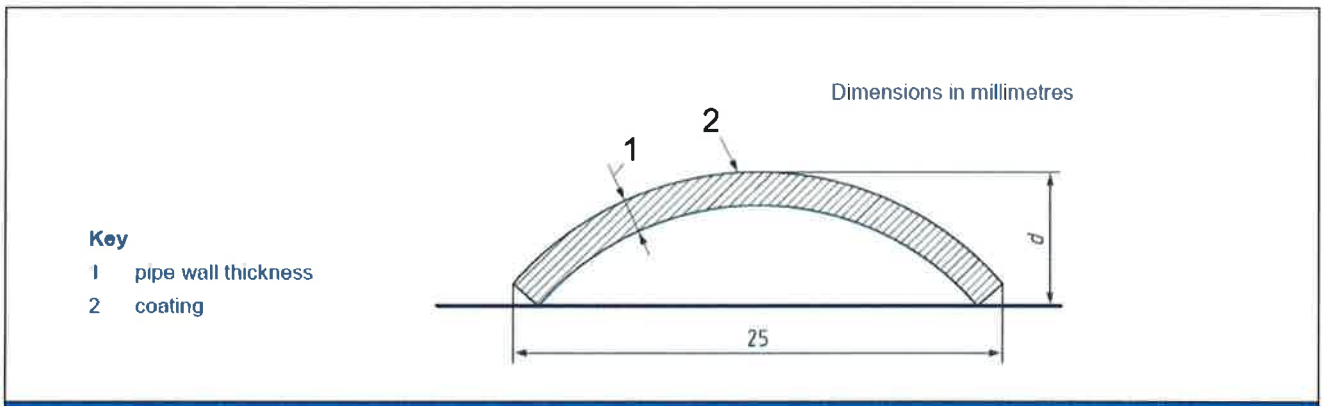

Figure 21: Flexibility Test specimen's Thickness determination

The mandrel radius, *r*, expressed in millimeters, which corresponds to an angle of deflection of 2° per pipe diameter length, are determined by using the Equation shown below:

$r = 28{,}15 \times d$

where *d* is the effective sample thickness, expressed in millimeters.

The test sample shall be bent over a mandrel whose radius is not larger than that determined in accordance with Equation shown above.

Also, the test specimen shall be bent such that the operation lasts no longer than 10 s and is completed within 30 s of the test samples having been removed of the freezer.

CORINTH PIPEWORKS S.A.

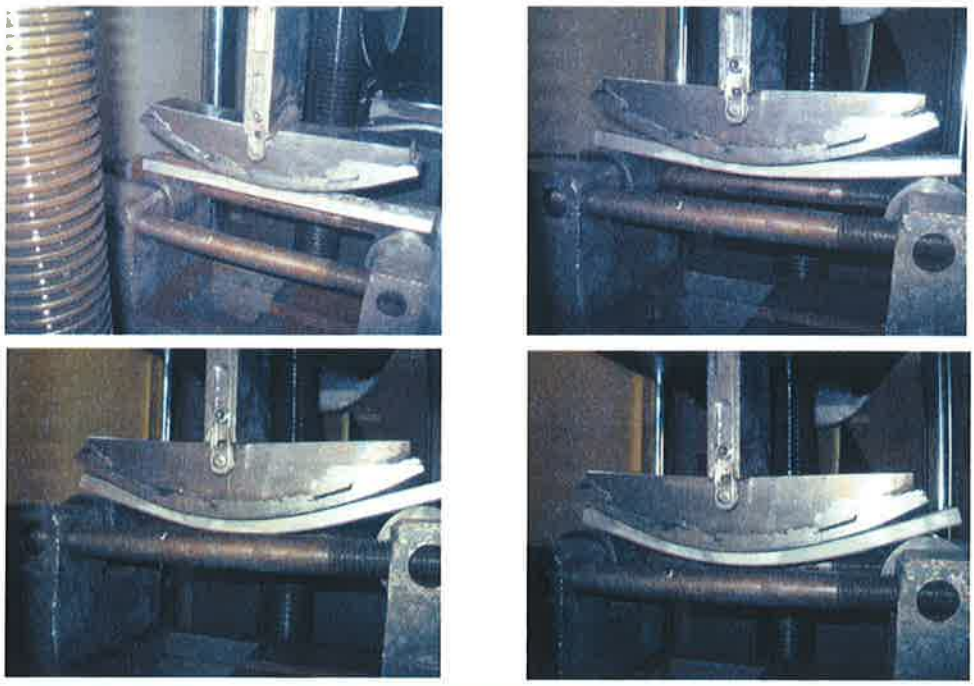

Figure 22: Bend test procedure

The bent test sample shall be warmed to 23°C ± 3°C, and held within the this temperature range for a minimum of 2h. Within the next hour, the bent sample is visually inspected for the presence of cracks.

G.5 REPORTS

The information recorded to the CPW-T-C-180.7.0.1 test report shall be:
a) The epoxy powder batch number.
b) The date of testing.
c) The specified angle of deflection.
d) The test temperature.
e) The testing method used.
f) Cracking, if any.

G.6 TECHNICAL DATA OF EQUIPMENT

G.6.1 HYDRAULIC PRESS

Manufacturer: TINIUS OLSEN
Additional information: Various mandrel sizes depending on bend radius required

CORINTH PIPEWORKS S.A.

G.6.2 SPECIMEN COOLING CHAMBER

Manufacturer: INSTRON
Model: SFL
Temperature range: -78°C to 350°C
Furnace dimensions: (30x30x30) cm^3
Calibration certificate: Issued by Metrocal Calibration Laboratory in accordance with ISO/IEC 17025.

CORINTH PIPEWORKS S.A.

APPENDIX H
Elongation at Break

H.1 Scope
Elongation at break shall be tested in accordance with EN ISO 527-1 to EN ISO 527-3.

H.2 Apparatus

The test shall be carried out using a tensile testing machine with which the force and displacement can be recorded. Tensile testing machine INSTRON 4411.

H.3 Procedure
H.3.1 Sample preparation

Carry out the test on coating samples that are free from adhesive residue. For testing, the polyethylene layer may be applied without adhesive to make sampling easier. After sampling, the underside of the samples (surface which was previously in contact with the steel substrate) may be mechanically smoothed. Specimens with visible flaws on their surfaces and at the edges are not tested.

H.3.2 Measurement

Carry out testing at a temperature of 23 °C ± 2 °C using type 1B, 5A or 5B test specimens (see EN ISO 527-2:1996-07, Figure 1 and Figure A.2). Elongation is measured between two gauge marks within the test area.
The following test speeds apply:

Table F.1 — Test speeds Test specimen type as in DIN EN ISO 527-2	Test speed as in DIN EN ISO 527-1 mm/min
1B	50
5A	25
5B	10

H.3.3 Evaluation
The elongation at break A0 in % shall be determined using the following equation:

$$\text{Elongation} = \frac{L1 - L0}{L0} \times 100, \%$$

where
A0 is the elongation at break in %;
L0 is the initial distance between the gauge marks;
L1 is the distance between the gauge marks at break.
The arithmetic mean of five results shall be determined.

H.4 Results

The following information must be reported in the polymer tensile test report:

- The organic coating batch number and thickness
- Speed of testing (mm/s)
- The date of testing
- The specimen's size
- Specimen orientation
- Number of specimens
- Average of the test results
- The testing Temperature

CORINTH PIPEWORKS S.A.

APPENDIX I
In process degradation of PE

I.1 In process degradation of PE

The present procedure describes the necessary steps to be followed for assessing the In progress degradation of PE. The test shall be performed in accordance with ISO 1133.

I.2 Equipment
Melt flow index tester Meltflixer LT.

I.3 Procedure
During the preheating time the operating Temperature is indicated on both thermostats controllers (red lid is indicated). If the measurement cylinder has approximately reached the set temperature (set temperature = actual temperature value) the die must be put in the measurement cylinder and after 15min start the test. The Temperature of both controllers must be constant

The cylinder is charged with 3g to 4g of the sample according to the anticipated melt flow rate (see for example Table1).During the charging , compress the material with the packing rod , using hand pressure and ensure a charge as free from air as possible.

Melt flow rate g/10 min	Mass of test portion in cylinder[1] g	Extrudate cut-off time-interval s
0,1 to 0,5	3 to 5	240[2]
> 0,5 to 1	4 to 5	120
> 1 to 3,5	4 to 5	60
> 3,5 to 10	6 to 8	30
> 10	6 to 8	5 to 15[3]

1) When the density of the material is greater than 1,0 g/cm³, it may be necessary to increase the mass of the test portion.

2) It is recommended that melt flow rate should not be measured if the value obtained in this test is less than 0,1 g/10 min or greater then 100 g/10 min.

3) To achieve adequate repeatability when testing materials having an MFR greater than 25 g/10 min, it may be necessary either to control and measure cut-off intervals automatically to less than 0,1 s or to use procedure B.

Table 1

The selected shall be loaded on the piston. Depending on the actual viscosity of the material allow the piston to descent under gravity or push it down faster using hand pressure, until a bubble – free filament is extruded. The extrudate shall be cut off with cutting tool and discard. Then the loaded piston shall be allowed to descent under gravity. When the lower reference mark has reached the top edge of the cylinder, start the stopwatch and simultaneously cut off the extruded portion with the cutting tool and again discard.

Successive cut-offs shall be collected in order to measure the extrusion rate at time – intervals , depending on the melt flow rate, so chosen that the length of a single cut –off is not less than 10mm and preferably between 10mm and 20mm .The cut-off time intervals are given in Table1 as a guide.

When the upper reference mark has reached the top edge of the cylinder the test is finished. Cut off the last portion. The rest material shall be pushed down faster using hand pressure.

Any cut-off containing visible air bubbles shall be discarded. The remaining cut-offs shall be weighed to the nearest 1mg and calculate their average mass.

The melt mass-flow rate (MFR),expressed in grams per 10min,is given by the equation

$$MFR(\theta, m\ nom) = \frac{t\ ref\ .\ m}{t}$$

where

- θ - is the test temperature, °C
- m nom - is the nominal load, kg
- tref - is the reference time 600 sec.
- m - is the average mass of cut-offs, g
- t - is the cut –off time interval, s

I.4 Results

The following information must be reported:

- The organic coating batch number
- The date of testing
- The load used in the test (kg)
- Duration of the test (min)
- The testing Temperature (°C)
- The Melt flow rate (g/10min)

CORINTH PIPEWORKS S.A.

CORINTH PIPEWORKS	QUALITY DEPARTMENT	PAGE 1/10
	THISVI PLANT	

TITLE	MANUFACTURING PROCEDURESPECIFICATION – EPOXY LINING
DOCUMENT No.	MPS_02_18_LI
REVISION No.	0
PRODUCTION LINE	TLP56
CUSTOMER	ICGB INTERCONNECTOR
PROJECT	INTERCONNECTOR GREECE - BULGARIA

SIZE / GRADE / QUANTITY

Pos. No	OD (in)	WT (mm)	Grade PSL2	Type	Lengths	Purpose	FBE thickness	Adhesive thickness	PE thickness	Lining	Quantity (m)
1	32	11	L450ME	SAWH	12m /18 m	Line	350μm	150μm	3.000μm	75μm	91.084
2	32	11	L450ME	SAWL	12m	Cold bend	350μm	150μm	3.000μm	75μm	13.345
3	32	14,2	L450ME	SAWH	12m/18 m	Line	350μm	150μm	3.000μm	75μm	43.591
4	32	14,2	L450ME	SAWL	12m	Cold bend	350μm	150μm	3.000μm	75μm	8.935
5	32	16	L450ME	SAWH	12m/18 m	Line	350μm	150μm	3.000μm	75μm	20.416
6	32	16	L450ME	SAWL	12m	Cold bend	350μm	150μm	3.000μm	75μm	3.593
7	32	20	L450ME	SAWL	12m	Line	350μm	150μm	3.000μm	75μm	5.271
8	32	20	L450ME	SAWL	12m	Cold bend	350μm	150μm	3.000μm	75μm	1.017
9	32	11	L450ME	SAWH	12m	Emergency stock	350μm	150μm	3.000μm	75μm	216
10	32	14,2	L450ME	SAWH	12m	Emergency stock	350μm	150μm	3.000μm	75μm	96
11	32	16	L450ME	SAWH	12m	Emergency stock	350μm	150μm	3.000μm	75μm	60
12	32	20	L450ME	SAWL	12m	Emergency stock	350μm	150μm	3.000μm	75μm	24

PRELIMINARY

	ISSUED	APPROVED	CUSTOMER APPROVED
DATE	16/01/2018	17/01/2018	
NAME/SIGNATURE	K. NTOULAS COATING & LINING QC MANAGER	N. VOUDOURIS QUALITY DIRECTOR	CORINTH PIPEWORKS S.A.

1. SCOPE

The present *Manufacturing Procedure Specification (MPS)* describes the basic manufacturing steps as well as quality control activities which are involved with the production and inspection of **Factory Applied Internal Flow coating** for the "**Interconnector Greece-Bulgaria**" Project of NOBLE ENERGY, in accordance to Project Specification 10760-SPC-CP-P0-003 Rev.4. All inspection details such as testing frequency and acceptance limits are analytically described in the relevant project specific Inspection and Test Plan (ITP)latest revision.

Figure 1 presents a process flow chart of the lining plant:

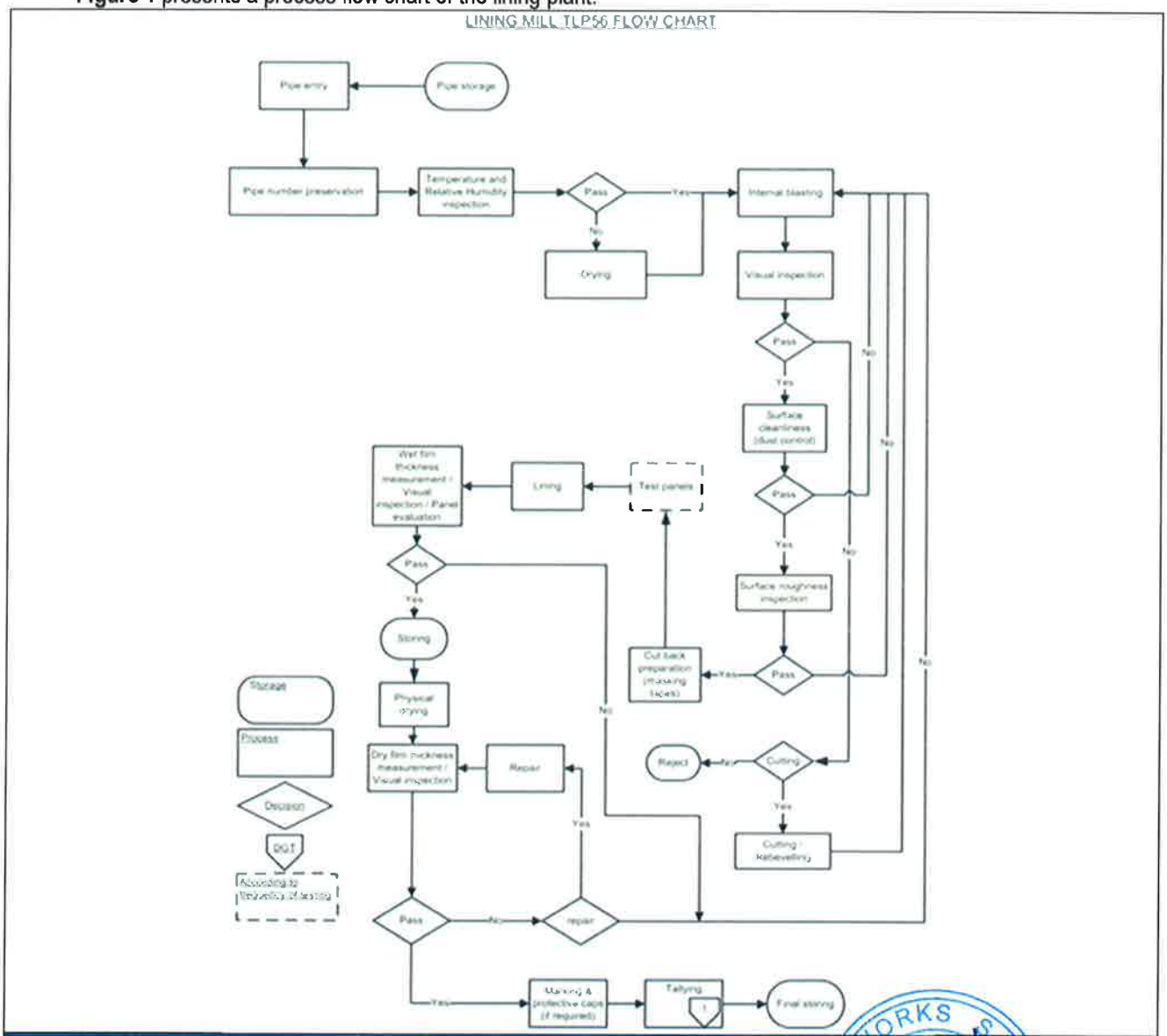

Figure 1: Layout of the lining plant

2. COATING MATERIALS

2.1 Composition/requirements of the coating system

The coating material is composed of two packs: base and hardener.

The coating material shall not contain any substances that will be released from the paint film after it is cured and are proven to be detrimental to the operations of the pipeline.

The applied and cured paint film shall be smooth to obtain a reduction in the friction.

All materials to be used are selected from acknowledged and approved by Corinth Pipeworks suppliers. Materials to be used shall be according to the specific project requirements.

The technical data sheet and qualification report of the proposed materials shall be submitted to the customer for review and approval.

2.2 Batch certificates

The manufacturer of the coating material shall provide batch certificates and technical data sheets that contains test methods and acceptance criteria.

Coating materials to be delivered to CPW are accompanied by the relevant batch certificates issued by the coating materials manufacturer. The Quality Control Manager of the Coating mill reviews the material batch certificates and considering the results of the receiving inspection, verifies that the material properties are in accordance with the project requirements.

2.3 Storage and handling of coating materials

Upon delivery, storage and handling of coating materials shall be as per manufacturer's recommendations. The personnel responsible for receiving inspection shall check the following:

- The packing is in good condition.
- The material bears a label with the code name of the material, supplier's name, batch number and other data, which help identify the material.
- The liquid epoxy materials shall be stored under controlled condition according to the instruction of the technical data sheets.

Samples from the delivered materials shall be taken by Quality Control personnel to perform the relevant receiving inspection tests.

In case where during receiving inspection one of the above requirements is not met, the materials with the identified problem shall be marked and unloaded at a designated area. The Coating Quality Control manager shall be notified accordingly to assess whether a Non-Conformance should be issued.

CORINTH PIPEWORKS S.A.

3. APPLICATION OF THE COATING SYSTEM

3.1 Preliminary inspection

At the entry of the lining mill the pipes are internally high pressure water washed and then fed onto the skids of the internal shot blaster section, where the following preliminary pipe inspections and actions take place:

- Pipe number preservation.
- Barcode reading (Appendix A).
- Pipe surface visual inspection for dents, laps, defective bevels and any other defects. Defective pipe shall be marked for future identification and damage report shall be sent for client notification.
- The internal pipe surface is visually checked for contamination with oil or grease. If contaminated pipes are detected they are send for cleaning according to SSPC SP-1 standard.
- Ambient conditions (air temperature, relative humidity) and the steel surface temperature are measured and compared with the Dew Point. Pipe temperature before blasting shall be 3°C higher than Dew Point. The relative humidity shall be less than 85%. In case that moisture is present on the internal pipe surface or the pipe temperature is too low, LPG burners are used for moisture removal and pre-heating of the pipe before blasting.

3.2 Surface preparation / inspection

The interior pipe surface is subjected to abrasive cleaning using dry blasting techniques.

The following inspections are taking place after blasting in accordance to relevant Inspection and ITP latest revision and Project Specification 10760-SPC-CP-P0-003 Rev.4:

- The conductivity of abrasive material shall be less than 60mS/cm according to ASTM D4940.
- The height of the surface profile attained shall be within 30μm and 60μm, as measured in accordance with the requirements of ISO 8503-4 (Stylus method).
- Before coating, the pipe surface is cleaned from dust, residues of abrasive process and foreign matter using clean dry compressed air free of oil. The blasted surface is checked according to ISO 8502-3 for dust contamination (size and quantity) with class 2 or better. If contamination or dust is observed, the pipe shall be reprocessed.
- The cleanliness of the surface of each pipe shall be a minimum of SA 2 ½ (near-white metal) according to ISO 8501-1.
- The salt contamination level is checked using SCM400 salt contamination meter and shall be less than 20mg/m^2.
- Systematic visual inspection of the clean surface is also performed. Slight surface imperfections (e.g. slivers, laminations, scratches etc), can be removed by superficial grinding provided that the final surface has a smooth contour and the remaining wall thickness is within the acceptable tolerances. Treated areas greater than 10cm^2 shall be prepared to provide a profile with the above specified roughness. If the grinding area required exceeds these limits, the pipe shall be re-blasted.

Following surface preparation, the surface being coated shall not be exposed for a length of time that can result in flash rust and under no circumstance shall the time be more than 4 h.

CORINTH PIPEWORKS S.A.

3.3 Internal coating application

After blasting, pipes are internally coated through the nozzles that are mounted at the end of a long arm. The nozzles are stable and spraying the paint onto the internal pipe surface as the pipe travels and rotates along the arm. The cured film thickness (DFT) shall be minimum 75μm.
Full traceability of the batch numbers of the materials used is maintained as the batch number of each material fed for consumption is recorded together with the time of feeding on the "*Materials Consumption Sheet*" issued every shift (Appendix A). Viscosity test is performed on the mixed paint at each new mix and at lining interruptions.

3.4 Accelerated curing

The internal coated pipes are transported immediately in the curing room where warm air is entering to them and removes the volatiles. The pipes are remaining in the curing room for about 30 minutes at a temperature 25-50°C. During initial accelerating curing the air temperature shall not exceed 100°C.

3.5 Internal cut-back preparation

Lining material is removed from both pipe ends with the use of masking tapes, allowing for a cut-back area with a clear finish. Cut-back length shall be 20±5mm.

4. INSPECTION AND TESTING

4.1 General

Inspection and testing shall be carried out in accordance with this MPS, and relevant project specific ITP latest revision, and meet the requirements of Project Specification 10760-SPC-CP-P0-003 Rev.4.

4.2 Visual inspection

Each lined pipe is visually inspected for the detection of any surface defects such as irregularities, sags, runs, blisters, pinholes, etc. Coating should be uniform without any surface defects or damages.

4.3 Thickness Measurement

The dry film thickness of the coating is measured using non-destructive methods according to Project Specification 10760-SPC-CP-P0-003 Rev.4. Thickness, measurements are taken at both pipe ends (as a minimum 8 readings). Thickness, measurements are taken at both pipe ends (as a minimum 8 readings). The infected areas shall be repaired.

Dry film thickness measurements are performed with an electronic device based on the magnetic induction principle (±3 % instrument accuracy). At the beginning of every shift the thickness measurement device is calibrated using standard steel plates of similar thickness to the pipe wall by means of plastic shims of the same thickness as the nominal coating thickness.

NOTE: The instrument shall be zeroed on a smooth, flat surface and adjusted. A series of reading shall be taken on the unpainted abrasive blast cleaned surface to determine the correction factor on taking readings of the painted surface. The readings obtained shall be reduced by the correction factor to give the true reading of paint above the peaks.

Wet film thickness is measured using appropriate thickness combs. The wet film thickness shall be adequate to achieve the required DFT to produce the required dry film thickness and according to raw material supplier's recommendations.

4.4 Internal coating tests

The following tests are performed inside the internal coating mill or at the in-house laboratory:

- Cross Cut Adhesion Test (test on panels)
- Pinhole test (test on wet and dry paint films / glass slides)
- Bend test - Conical Mandrel (test on panels)
- Cure test (test on panels)
- Buchholz Hardness test (test on panels): API RP 5L2 Table 3.5)
- Surface roughness of internal coating (test on pipes)

The exact number, type and frequency of tests as well as acceptance criteria shall be according to the relevant project specific ITP latest revision.

4.5 Retesting

If failures are recorded during production control tests, the coated components produced from the last positive test shall be deemed defective.

In such cases further appropriate testing shall be proposed and carried out with the approval of the customer.

5. REPAIR / REWORK

Pipes with unsatisfactory coating or excessive coating damages are sent for rework (stripping and re-coating). The maximum total area for repair shall be limited to 1% of the total pipe surface.
There shall be no paint stains or drops on pipe bevels or cut-backs
Repair material to be used shall be compatible with the original coating and it shall be applied according to supplier's recommendations and procedures.
Each repair is recorded on the relevant repair report issued every shift.

6. MARKING

All pipes, which have successfully passed all inspections and controls, are marked according to the requirements of the relevant project specific ITP latest revision.

7. HANDLING / STORING

Coated pipe shall be handled in a manner that avoids damage to the pipe, pipe ends and coating. At the exit of the mill, pipes are lifted by cranes using nylon belts; they are loaded on tracks and transported to the storage area. Alternative the pipes can be handled by forklifts with protected forks.
Any pipe that is damaged during handling shall be repaired in accordance with §5.

8. FINAL DOCUMENTATION

For the final product shall be issued a mill test certificate in accordance to EN 10204 / 3.1

CORINTH PIPEWORKS S.A.

APPENDIX A
TRACEABILITY OF PIPES AND COATING MATERIALS

A.1. SCOPE

The scope of this chapter is to describe the tracking system that is used by Corinth Pipeworks to ensure full traceability of pipes and coating materials during coating activities of ICGB project. Traceability of test specimens for coating is also mentioned.

A.2. PIPE IDENTIFICATION PRIOR TO COATING

After quality control inspection of produced bare pipes, their information including pipe number, OD, wall thickness, grade, length, weight and heat number is entered to the SAP system of Corinth Pipeworks. Thereafter, for each pipe a magnetic barcode label with pipe number information is printed for better handling and tracking purposes. This label is placed on the internal surface of one pipe end of each pipe by the quality control personnel of the pipe mill.

A.3. TRACEABILITY SYSTEM AT COATING MILL

A.3.1 COATING ENTRANCE

Each pipe that it is entering in the coating mill is barcode scanned by the pipe handling operator. This operation is managed by a special level II software named *Pipecoating* that communicates directly with SAP ERP (**Figure 5**). At the SAP the status of pipes that have been entered in the coating plan changes to *Coating In Progress*. The operator is also checking that the pipe number is legibly written in the internal surface of the pipes.

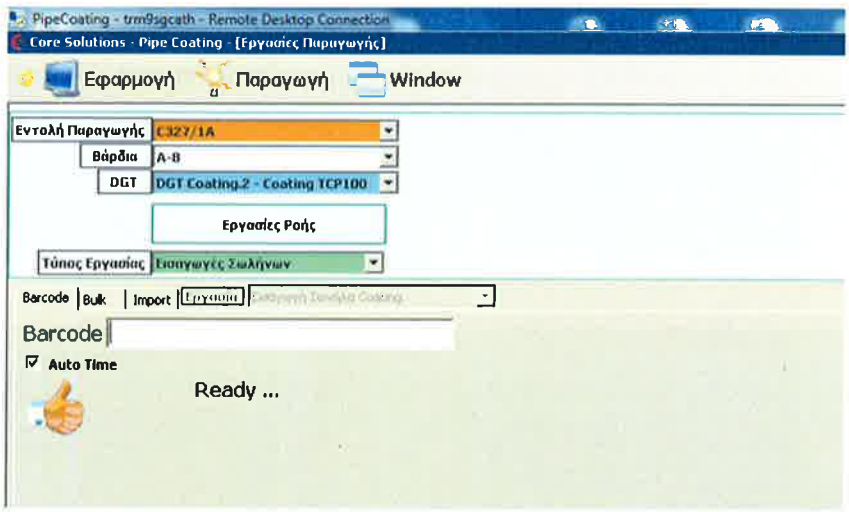

Figure 5: CPW *Pipecoating* level II software

A.3.2 EXTERNAL PIPE BLASTING

Pipes that pass the external blasting operation are transferred to the bare inspection station for quality control inspections according to relevant ITP. Pipes with acceptable inspection results are again barcode scanned by the quality control inspector and are released for coating. The barcode label is removed from pipes to be coated. Pipes that do not meet the inspection requirements are returned to coating entrance in order to be re-processed.

A.3.3 INDUCTION HEATING

After external blasting the pipes' sequence is recorded by barcode reading. With the use of a pipe sensor prior to pipe temperature monitoring, is also achieved the real time correlation of measuring temperature to each individual pipe. The pipe pre-heating temperature is continuous monitored by two optical pyrometers before and after FBE application. Corinth Pipeworks S.A. has developed a special temperature control program in order to manage the data of both pyrometers and induction coil(s), keeping separate records for each pipe (**Figure 6**).

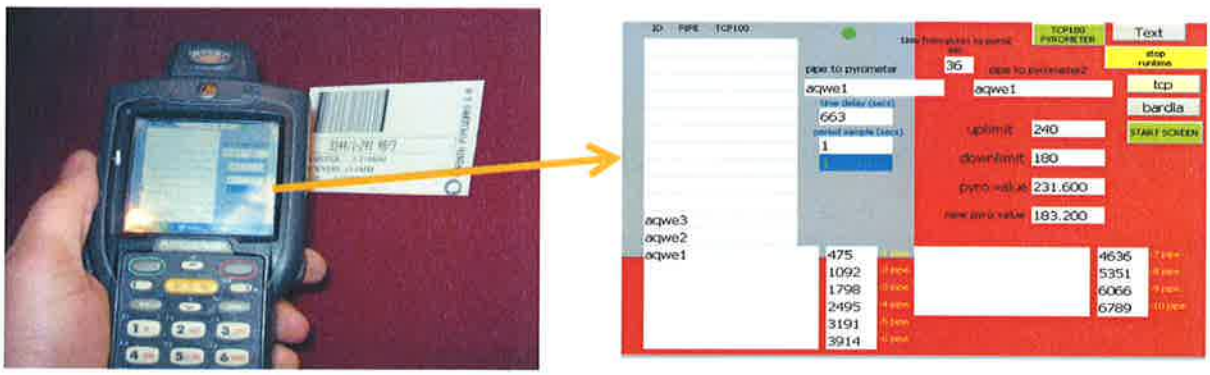

Figure 6: Barcode reading and temperature control program for optical pyrometers

A.3.4 COATING

A.3.4.1 IDENTIFICATION OF COATING MATERIALS

During coating material receipt the quality control of the yard is controlling the identification marking of each package according to §2.3. The packages with missing or incorrect information are marked and transferred at a separate designated area for further investigation.

Coating material information including material type, batch number and weight is entered to SAP ERP system by warehouse manager.

A.3.4.2 CONSUMPTION OF COATING MATERIALS

The operator that feeds the coating materials in the silos for consumption keeps records of them (hard copy) in the Consumption Report of Coating Materials, issued per shift. The records include the type of consumed material,

CORINTH PIPEWORKS S.A.

batch number, weight, time and date of consumption. This information is also electronically recorded in the *Pipecoating* software (**Figure 7**).
The correlation of consumed coating materials to each individual pipe is performed using the same system that is used for tracking the pre-heating temperature of pipes but taking in to consideration a time delay equal to the time that is needed for each coating material to travel from the silo to the pipe.

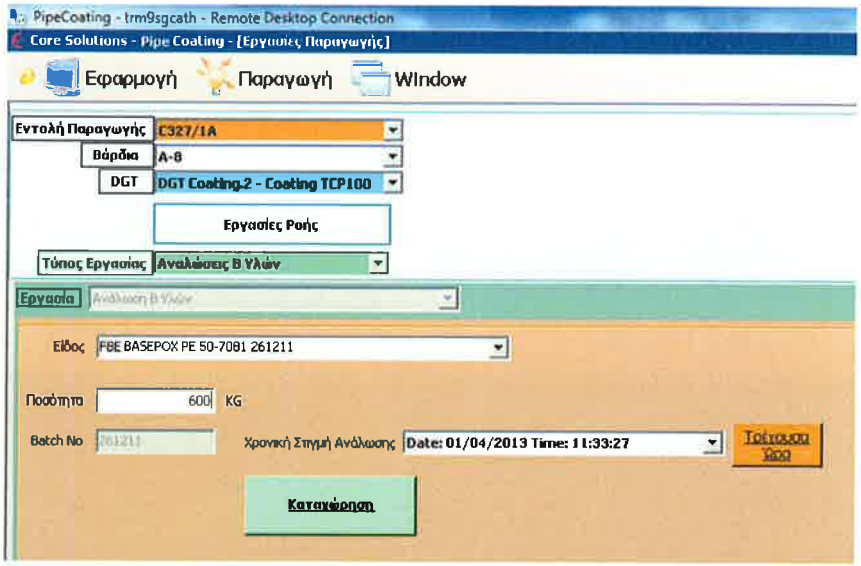

Figure 7: Coating material consumption screen of *Pipecoating* software

A.3.4.3 IDENTIFICATION AND TRACKING OF SAMPLES FOR COATING TESTING

Each sample that is extracted from a coated pipe for testing is identification marked by quality control personnel. The marking on samples includes as a minimum the pipe number, coating process sheet number, shift and date of coating (**Figure 8**). Quality control inspector keeps full hard records of testing information in the Coating Inspection and Test Report that is issued per shift. Sampling information is also entered to *Pipecoating* software in order to maintain tracking of samples during testing.

The coated pipes are released for shipment per production shift according to the test results. When all tests are completed with acceptable results (according to the relevant ITP) and the respective testing per production shift are released, the quality status of coated pipes in the SAP system changes to Accepted by the quality control manager.

CORINTH PIPEWORKS S.A.

Figure 8: Sample's marking on coated pipe for destructive testing

A.3.4.4 TRACKING OF PIPES THAT NEEDS COATING REPAIR OR STRIPPING

The pipes that have to be repaired or stripped are recorded in the Coating Repair/Rework Report and also in the *Pipecoating* software. Coated pipes that need repair or stripping are transferred and temporarily stored at separate designated areas.

A.3.5 COATING EXIT

The pipes before leaving the coating plant shall bear all the required external identification marking (according to the relevant ITP) and at least the pipe ID in order to maintain the traceability during the internal coating operations. At the exit of the coating plant the operator keeps hard records of the pipes that leaving and also enters them to the *Pipecoating* software. New magnetic barcode label is also printed and placed in the internal surface of each pipe (one pipe end).

CORINTH PIPEWORKS S.A.